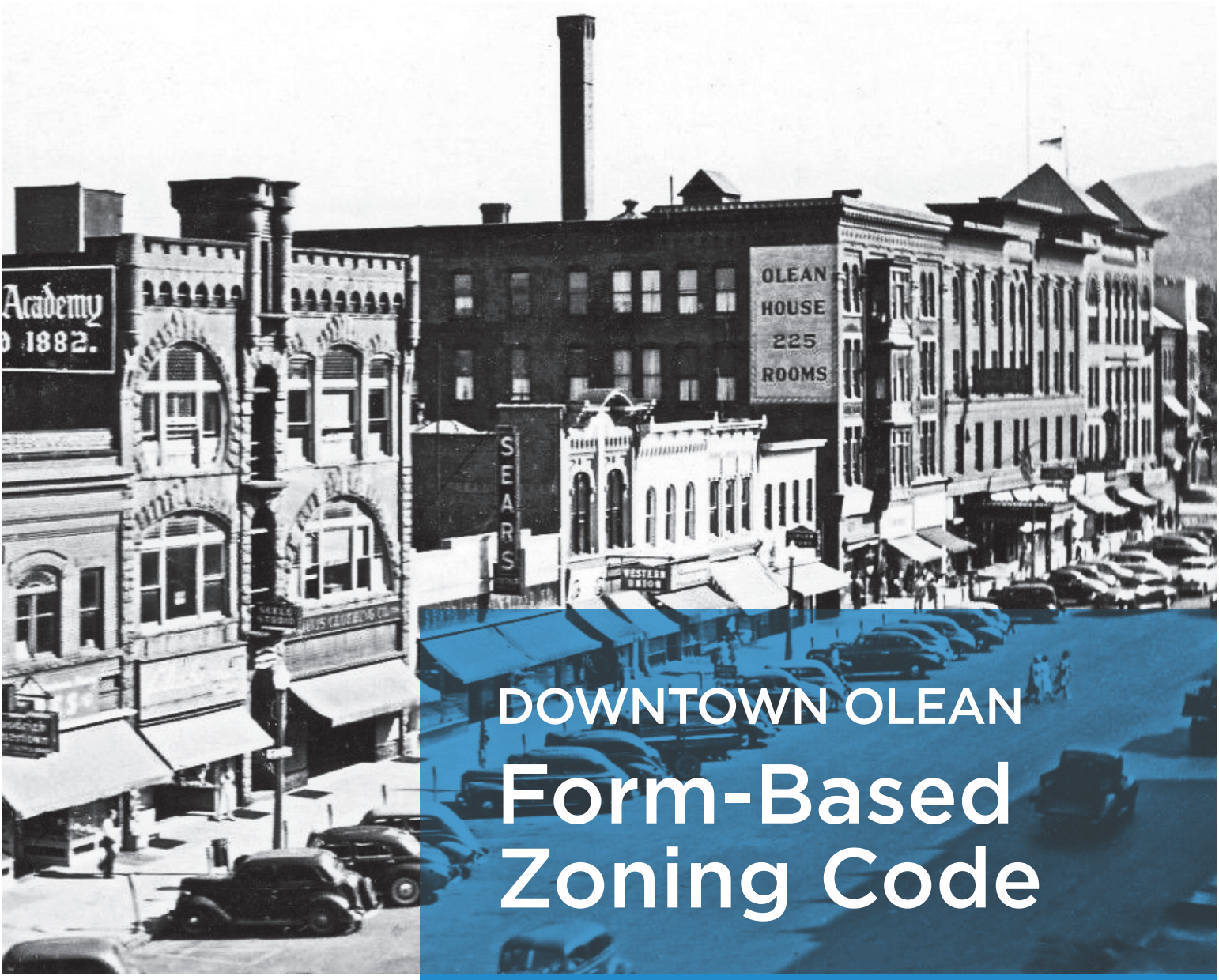

DOWNTOWN OLEAN
Form-Based Zoning Code

A zoning update for Downtown Olean, NY

December 2015
DRAFT

PREPARED FOR:

City of Olean, NY

William J. Aiello
MAYOR

Adam Jester
COMMON COUNCIL PRESIDENT

Mary George
PROGRAM COORDINATOR
DEPARTMENT OF
COMMUNITY DEVELOPMENT

CHUCK BANAS DESIGN

“Lively, diverse, intense cities contain the seeds of their own regeneration.”

Jane Jacobs

Table of Contents

Article 1. Introductory Provisions 1-1

Sec. 1.1. Title 1-1
Sec. 1.2. Purpose and Intent 1-1
Sec. 1.3. Districts Established 1-1
1.3.1. Districts 1-1
1.3.2. Zoning Map 1-1
Sec. 1.4. Applicability 1-1
1.4.1. Territorial Applicability 1-1
1.4.2. Relationship to Other Regulations 1-1
1.4.3. Conflicting Provisions 1-2
Sec. 1.5. Transitions 1-2
1.5.1. Illegal Structures & Uses 1-2
1.5.2. Creation of Nonconformities 1-2
1.5.3. Previously Granted Approvals 1-2
1.5.4. Pending Applications 1-2
Sec. 1.6. Severability 1-2
Sec. 1.7. Effective Date 1-2

Article 2. Zoning Districts 2-1

Sec. 2.1. Measurements and Exceptions 2-1
2.1.1. Lots 2-1
2.1.2. Setbacks 2-1
2.1.3. Height 2-2
2.1.4. Transparency 2-3
Sec. 2.2. City Center (CC) 2-5
2.2.1. Intent 2-5
2.2.2. Applicability 2-5
2.2.3. Lots 2-6
2.2.4. Setbacks 2-6
2.2.5. Height 2-7
2.2.6. Transparency 2-7
2.2.7. Additional Standards 2-8
Sec. 2.3. Neighborhood Center (NC) 2-9
2.3.1. Intent 2-9
2.3.2. Applicability 2-9
2.3.3. Lots 2-10
2.3.4. Setbacks 2-10
2.3.5. Height 2-11
2.3.6. Transparency 2-11
2.3.7. Additional Standards 2-12

Article 3. Architectural Standards 3-1

Sec. 3.1. General 3-1
3.1.1. Building Mass 3-1
3.1.2. Facade Articulation 3-1
3.1.3. Historic Rehabilitation 3-1
Sec. 3.2. Specific 3-1
3.2.1. Fenestration 3-1
3.2.2. Shopfront Elements 3-2
3.2.3. Roof Elements 3-3
3.2.4. Facade Materials 3-4
3.2.5. Refuse and Mechanical Areas 3-4

Article 4. Uses 4-1

Sec. 4.1. Principal Uses 4-1
4.1.1. General 4-1
4.1.2. City Center (CC) 4-1
4.1.3. Neighborhood Center (NC) 4-2
Sec. 4.2. Accessory Uses 4-3
4.2.1. General 4-3
4.2.2. Specific 4-3

Article 5. Site Development 5-1

Sec. 5.1. Parking and Access 5-1
5.1.1. Pedestrian Access 5-1
5.1.2. Bicycle Access and Parking 5-1
5.1.3. Vehicle Access and Parking 5-4
5.1.4. Loading Areas 5-7
Sec. 5.2. Landscape 5-7
5.2.1. General 5-7
5.2.2. Parking Lot Landscape 5-8
5.2.3. Landscape Buffers 5-9
Sec. 5.3. Fences and Walls 5-10
Sec. 5.4. Lighting 5-11
5.4.1. Lighting Standards 5-11
5.4.2. Exemptions 5-11
Sec. 5.5. Signs 5-11
5.5.1. General 5-11
5.5.2. Sign Types 5-14
5.5.3. Exempt Signs 5-22
5.5.4. Sign Measurement 5-23

Table of Contents

(continued)

Article 6. Approvals and Administration 6-1

Sec. 6.1. Approvals 6-1
- 6.1.1. Special Use Permits 6-1
- 6.1.2. Site Plan Review 6-1
- 6.1.3. Variances 6-1
- 6.1.4. Amendments 6-1

Sec. 6.2. Administration 6-1

Article 7. Nonconformities 7-1

Sec. 7.1. General 7-1
- 7.1.1. Authority to Continue 7-1
- 7.1.2. Proof of Nonconformity 7-1
- 7.1.3. Determinations of Nonconformity 7-1
- 7.1.4. Illegality 7-1

Sec. 7.2. Nonconforming Uses 7-1
- 7.2.1. Description 7-1
- 7.2.2. Standards 7-1

Sec. 7.3. Nonconforming Structures 7-2
- 7.3.1. Description 7-2
- 7.3.2. Standards 7-2

Sec. 7.4. Nonconforming Lots 7-2
- 7.4.1. Description 7-2
- 7.4.2. Standards 7-2

Sec. 7.5. Nonconforming Signs 7-3
- 7.5.1. Description 7-3
- 7.5.2. Standards 7-3

Article 8. Definitions 8-1

Sec. 8.1. Rules of Interpretation 8-1
- 8.1.1. Abbreviations 8-1
- 8.1.2. Conjunctions 8-1
- 8.1.3. Current Versions and Citations 8-1
- 8.1.4. Delegation of Authority 8-1
- 8.1.5. Fractions 8-1
- 8.1.6. Gender 8-1
- 8.1.7. Lists and Examples 8-1
- 8.1.8. Mandatory, Prohibitory, and Permissive Terms 8-1
- 8.1.9. Number 8-1
- 8.1.10. Tense 8-2
- 8.1.11. Text and Graphics 8-2

Sec. 8.2. Glossary of Terms 8-2

List of Tables and Figures

Table 5A Bicycle Parking 5-2

Table 5A Bicycle Parking (continued) 5-3

Table 5B Parking Stall and Drive Aisle Dimensions 5-4

Figure 1A Downtown Zoning Map 1-3

Figure 3A Facade Elements 3-2

Figure 5A Parking Lot Landscape 5-8

Figure 5B Outdoor Lighting Standards 5-11

Article 1. Introductory Provisions

Sec. 1.1. Title

This Ordinance is known, cited, and referred to as the "Downtown Form-Based Code." All references to this "Code" refer to this Downtown Form-Based Code unless otherwise stated.

Sec. 1.2. Purpose and Intent

The Downtown Form-Based Code is adopted to implement the objectives of the Olean Comprehensive Plan. By addressing the relationship between building facades and the public realm, the form and mass of buildings in relation to one another, and the scale and type of blocks and open spaces, it is the intent of this Code to:

- Preserve and enhance the historic character of downtown Olean;
- Promote an orderly, compatible, and varied mix of uses;
- Allow for adaptive reuse of historic structures and contextually-responsive infill development;
- Ensure a higher quality of new construction and rehabilitation;
- Attain the economic, social, and environmental benefits of a walkable downtown;
- Foster greater predictability in the outcome of future development; and
- Streamline the development approvals process through clear and objective standards.

Sec. 1.3. Districts Established

1.3.1. Districts

In order to fulfill the purpose and intent of this Code, the City establishes the following zoning districts:

A. City Center (CC).

B. Neighborhood Center (NC).

1.3.2. Zoning Map

A. The location and boundaries of the City Center (CC) and Neighborhood Center (NC) zoning districts are established on a scaled map designated "Zoning Map of the City of Olean," which is kept on file and will be available for public viewing in the Office of the City Clerk, and such map is hereby declared to be part of this Code. For a detailed map of the City Center (CC) and Neighborhood Center (NC) zoning districts, refer to Figure 1A: Downtown Zoning Map, p. 1-3.

B. Where there is any question regarding the location of zoning district boundaries, refer to Chapter 28, Sec. 4.3, Interpretation of district boundaries.

Sec. 1.4. Applicability

1.4.1. Territorial Applicability

The Downtown Form-Based Code applies to all land, structures, and uses within the City Center (CC) and Neighborhood Center (NC) zoning districts. This Code does not apply to any other zoning district described in Chapter 28, Zoning.

1.4.2. Relationship to Other Regulations

A. **Application of Chapter 3.** Chapter 3, Advertising and Signs, does not apply to the City Center (CC) and Neighborhood Center (NC) zoning districts.

B. **Application of Chapter 28.** Chapter 28, Zoning, applies to the City Center (CC) and Neighborhood Center (NC) zoning districts, with the exception of the following non-applicable sections, which are superseded by this Code:

1. Article 2, Interpretation, with the exception of use definitions, which do apply.
2. Article 10, Development guidelines and general provisions, with the exception of Sec. 10.1, Sec 10.2, 10.8, 10.9, and Sec. 10.11, which do apply.
3. Article 11, Signs.
4. Article 12, Non-conforming buildings, uses, and lots.

C. **Other Regulations.** Any conflict between this Code and any other City ordinance or regulation (including Chapter 28, Zoning) must be resolved in favor of the intent of this Code. Notwithstanding the provisions of this Code, the State Uniform Fire Prevention and Building Code and Energy Conservation Construction Code are applicable and controlling at all times.

1.4.3. Conflicting Provisions

If any provision of this Code contains an actual, implied, or apparent conflict with another provision of this Code, the more restrictive provision controls.

Sec. 1.5. Transitions

1.5.1. Illegal Structures & Uses

A. Any structure or use that was illegal prior to adoption of this Code, but is subsequently made legal by this Code, is deemed legal as of the effective date of this Code.

B. Any structure or use that was illegal prior to adoption of this Code, and does not conform to all requirements of this Code, remains illegal. Illegal structures and uses are not considered nonconforming structures or uses.

1.5.2. Creation of Nonconformities

A legal structure, use, or lot that conformed to all zoning standards that were in force prior to the effective date of this Code, but no longer meets all the zoning standards of this Code, is deemed nonconforming and is controlled by the provisions of Article 7, Nonconformities.

1.5.3. Previously Granted Approvals

A. If any approval was lawfully issued prior to the effective date of this Code, the structure may be completed, use established, or site improved in accordance with the approval that was issued. All approvals granted prior to the effective date of this Code remain in full force and effect, and development may proceed in accordance with the approved plans, including all conditions and restrictions included as part of approval.

B. If the applicant fails to act before any approval expires, including any periods of extension granted, the provisions of this Code govern and the previous approval is revoked.

1.5.4. Pending Applications

A. An application that has been submitted and considered complete prior to the effective date of this Code is deemed to be a pending application, governed under the provisions that were in force when submitted. A new application submitted after the effective date of this Code is governed under the provisions of this Code.

B. If a pending application that has been submitted and considered complete prior to the effective date of this Code, and is modified after the effective date of this Code, the Code Enforcement Officer must review the application to determine if the modifications constitute a new application. If it is determined that the modifications constitute a new application, the application must be resubmitted and is governed under the provisions of this Code.

Sec. 1.6. Severability

If any section, paragraph, subdivision, clause, sentence, or provision of this Code is adjudged by any court of competent jurisdiction to be invalid, that judgment does not affect, impair, invalidate, or nullify the remainder of this Code. The effect of the judgment is confined to the section, paragraph, subdivision, clause, sentence, or provision specifically addressed in the controversy in which judgment or decree was made.

Sec. 1.7. Effective Date

This Code will be effective upon adoption.

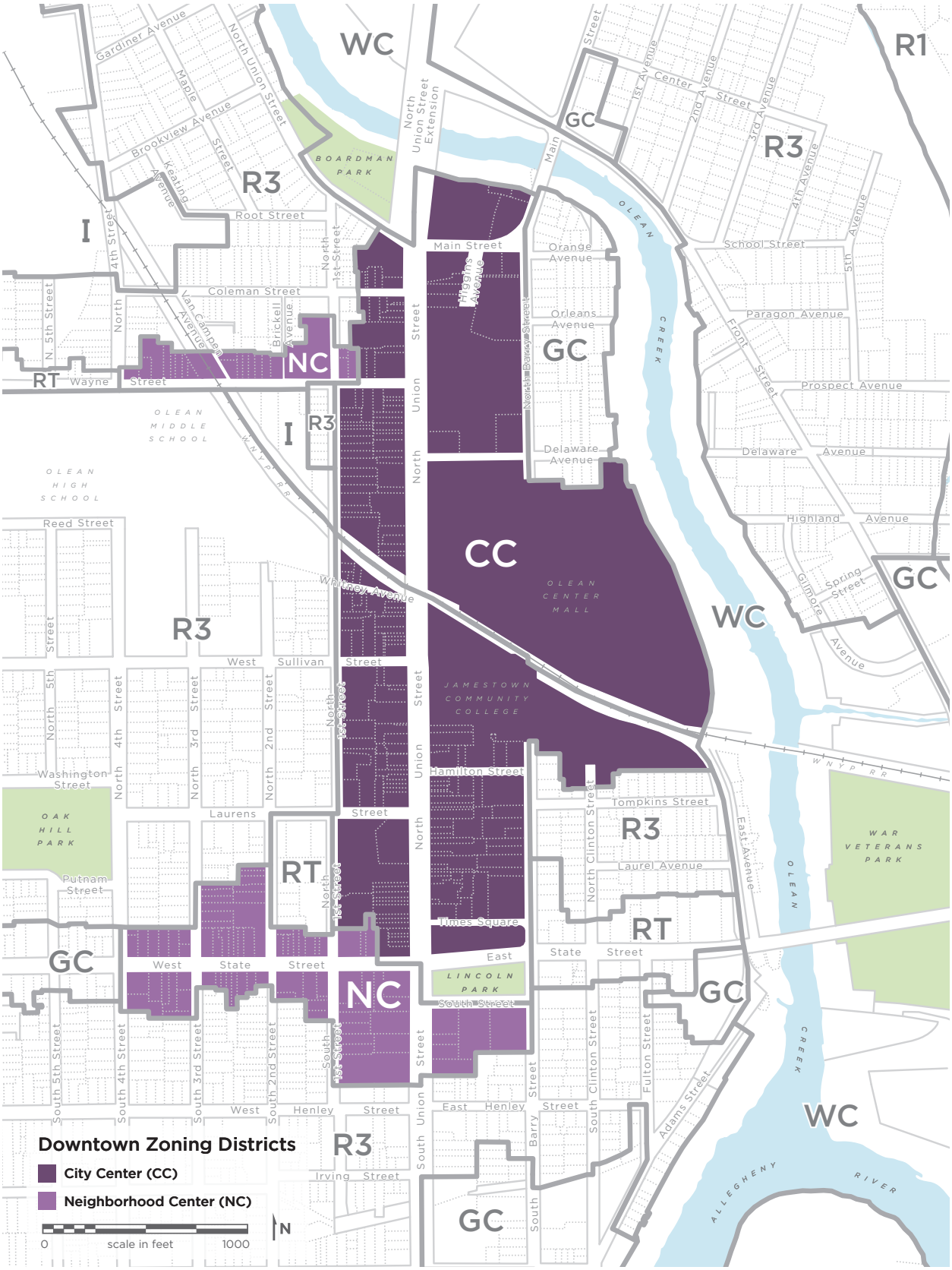

Figure 1A: Downtown Zoning Map

THIS PAGE INTENTIONALLY BLANK

Article 2. Zoning Districts

Sec. 2.1. Measurements and Exceptions

This section establishes the rules of measurement that are used to interpret the form and dimensional standards included in this Code. Where any overlap or conflict exists between this section and Chapter 28, Zoning, this section will control.

2.1.1. Lots

A. **Lot Area.** Lot area is measured as the total area contained within the boundary lines of a lot, excluding publicly dedicated and accepted rights-of-way.

B. **Lot Width.** Lot width is measured as the horizontal distance between side lot lines along the front lot line, with the following exceptions:

1. On a flag lot, only the flag portion of the lot is used to measure lot width.
2. On a lot accessed by an access easement, the easement is not used to measure lot width.

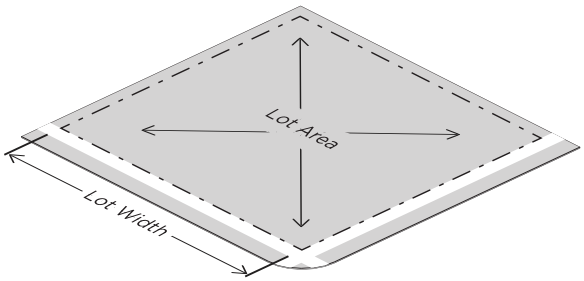

C. **Lot Coverage.** Lot coverage is measured by dividing the total area of building footprints of all principal and accessory structures by the total lot area. The following are exceptions to required setbacks:

1. On a flag lot, only the flag portion of the lot is used in the calculation of lot coverage.
2. On a lot accessed by an access easement, the easement is not used in the calculation of lot coverage.

2.1.2. Setbacks

A. **Setbacks.** A required setback is the area of a lot measured from the applicable lot line that must be maintained clear of permanent structures. The following are exceptions to required setbacks:

1. Accessory Structures. Accessory structures may encroach upon required setbacks, subject to the limitations of Sec. 4.2, Accessory Uses.
2. Building Features. Certain building features may encroach upon required setbacks, so long as they are located at least two feet from all lot lines and meet any of the following applicable criteria:
   a. An accessibility ramp may encroach upon any required setback to the extent necessary to perform its proper function.
   b. An air conditioner window unit may encroach up to 18 inches upon any required setback.
   c. An awning, canopy, or sunscreen may encroach up to ten feet upon any required setback.
   d. A balcony may encroach up to six feet upon any required setback.
   e. A bay window or turret that is less than ten feet wide may encroach up to three feet upon any required setback.
   f. A building entrance that is less than ten feet wide may encroach up to three feet upon any required setback.
   g. A chimney, flue, or smokestack may encroach up to three feet upon any required setback.
   h. Any ornamental lighting, lamp posts, and lawn decorations, such as benches, statues, birdbaths, and sculptures, may encroach upon any required setback.
   i. A porch or stoop may encroach up to six feet upon any required setback, so long as it remains unenclosed.
   j. A porte-cochere may encroach upon required interior side and rear setbacks only.
   k. A sill, belt course, cornice, eave, roof overhang, or similar architectural feature may encroach up to three feet upon any required setback.

3. Fences and Walls. Fences and walls may encroach upon required setbacks, subject to the limitations of Sec. 5.3, Fences and Walls.
4. Signs. Signs may encroach upon required setbacks, subject to the limitations of Sec. 5.5, Signs.
5. Pedestrian and Cyclist Facilities. Pedestrian or cyclist facilities, such as sidewalks, multi-use paths, and bicycle parking, may encroach upon required setbacks.
6. Vehicle Parking. Vehicle parking, including driveways and drive aisles, may encroach upon any required setback, subject to the limitations of Sec. 5.1.3, Vehicle Access and Parking.
7. Utilities. Utility infrastructure located underground and structures accessory to utilities, such as hydrants, manholes, transformers, poles, transmission lines, and cabinet structures, may encroach upon any required setback.

B. **Build-To Line.** A build-to line is created when a minimum and maximum setback is established, often requiring a building to be sited up to the front or corner side lot line. When a build-to line is established, the entire linear width of the building, for at least the first two stories, must be located along the build-to line, with only the following exceptions:

1. Facade articulation, such as window or wall recesses or projections, is counted as meeting the build-to requirement, so long as the variation does not exceed 18 inches of depth or projection.
2. An alcove, entryway recess, or upper-story balcony is counted as meeting the build-to requirement.
3. A chamfered corner or beveled edge of a building, designed to achieve corner visibility at a right-of-way intersection or driveway entrance, is counted as meeting the build-to requirement.
4. An outdoor dining area is counted as meeting the build-to requirement, so long as the outdoor dining area is created by the recess of only the ground story of the building facade, and the recess is no greater than 15 feet in depth from the building facade.

2.1.3. Height

A. Building Height

1. Building Height, Stories. Building height is measured in stories as follows:
   a. A story is counted as any habitable level within the building, constructed and designed to support occupancy as defined by the State Uniform Fire Prevention and Building Code.
   b. A faux story, which is not constructed and designed to support occupancy, does not count toward a minimum or maximum story height requirement.
   c. A half story does not count toward a minimum or maximum story height requirement. A half story is that portion of a building situated above a full story and having at least two opposite exterior walls meeting a sloping roof at a level not higher above the floor than a distance equal to one-half the floor-to-ceiling height of the story below. An attic with a finished floor is considered a half story.
2. Building Height, Feet. Building height is measured in feet from grade to:
   a. The top of the roof surface (not including the parapet) of a flat roof.

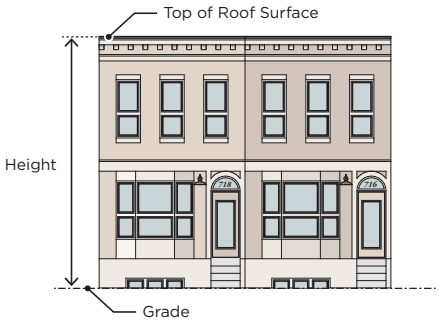

   b. The peak of a gambrel or mansard roof.

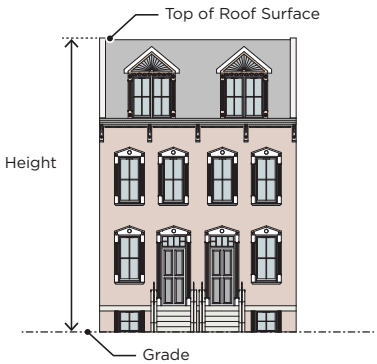

c. The midpoint between the eave and ridge of a pitched roof.

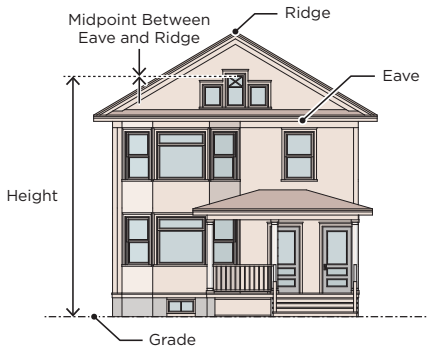

3. Building Height Exceptions. The following are exempt from minimum and maximum building height requirements:

   a. Accessory structures, which are governed by Sec. 4.2, Accessory Uses.

   b. Chimneys, fire escapes, derricks, conveyors, flues, ventilators, and smokestacks.

   c. Cooling towers, grain elevators, gantry cranes, sugar refineries, gasometers, conveyors, and other structures used for a manufacturing or transshipment process.

   d. Cupolas, domes, bell towers, minarets, monuments, spires, steeples, belfries, and ornamental towers, so long as they are not intended for occupancy.

   e. Dining cars, locomotive cars, shipping containers, and similar structures that are repurposed for permanent use and occupancy.

   f. Bulkheads, elevator enclosures, penthouses for elevators and stairways, skylights, scenery lofts, and water tanks, so long as these structures occupy no more than 25% of the total area of the roof.

   g. Green roofs, blue roofs, and other facilities used to manage stormwater.

   h. Parapet walls, limited to a height of five feet.

   i. Roof decks and associated railings.

   j. Solar and wind energy systems.

   k. Utilities.

   l. Wireless communication towers, antennas, and ancillary structures.

B. Story Height

1. Ground Floor Elevation. The ground floor elevation is measured from grade to the surface of the finished ground floor of the building.

2. Story Height. Story height is measured from the surface of any floor to the surface of the floor above it or, if there is no floor above, from the surface of the floor to the top of the wall plate.

   a. The minimum ground story height must be fully met within the first 30 feet of building depth as measured from the front facade. At least 50% of the ground story must meet the minimum story height requirement.

   b. At least 80% of the depth of each upper story must meet the minimum upper story height requirement.

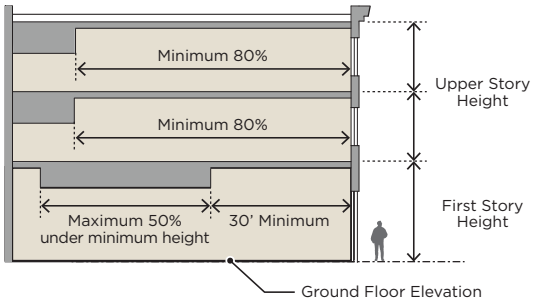

2.1.4. Transparency

A. Transparency

1. When measuring the transparency for any facade, the total area of fenestration is included, per the below. Fenestration is defined as the openings in a structure, including windows and doors, but not including loading berths and entries for parking. Fenestration includes frames, mullions, muntins, vents, and other elements integral to a window or door unit.

   a. Ground story transparency is calculated based on the total facade area located between two feet and ten feet above the finished ground floor.

   b. Upper story transparency is calculated based on the total facade area located between the surface of any floor to the surface of the floor above it or, if there is no floor above, from the surface of the floor to the top of the wall plate.

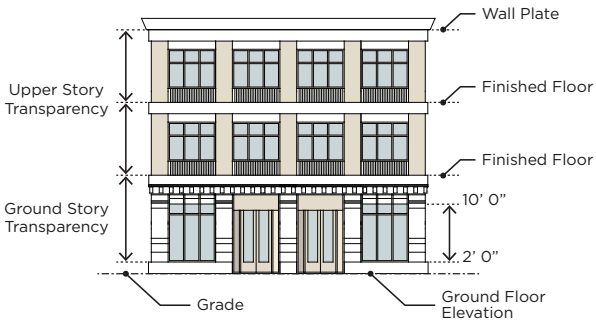

2. For any windows to be included in the transparency calculation, the glazing must meet the following criteria:

   a. For ground story glazing, the glazing must have a minimum 60% Visible Light Transmittance (VLT) and no more than 15% Visible Light Reflectance (VLR). The ground story glazing must remain unobstructed up to a minimum depth of five feet, with the exception of obstructions, such as window signs or product displays, that do not take up more than 25% of the total window area. The ground-story glazing must not include coiling shutters, accordion gates, or similar devices that obstruct visibility into or out of the building.

   b. For upper story glazing, the glazing must have a minimum of 40% VLT and no more than 15% VLR.

3. For any door to be included in the transparency calculation, the door must be part of a main entrance, open to and operable by customers or occupants during business hours in the case of a non-residential use, or operable at any time by occupants in the case of a residential use.

B. **Ground Story Window Sill Height.** The ground story window sill height is measured from the base of the building immediately beneath the window sill to the point where the window sill glazing commences.

C. **Main Entrance Location.** A main entrance is a principal point of access for pedestrians into a building, prominently visible from the adjacent right-of-way.

D. **Entrance Spacing.** Entrance spacing is measured as the distance between the edges of doors along the facade. To be counted toward an entrance spacing requirement, a door must be open to and operable by customers or occupants during business hours in the case of a non-residential use, or operable at any time by occupants in the case of a residential use.

Sec. 2.2. City Center (CC)

2.2.1. Intent

The intent of the City Center (CC) zoning district is to enable the core of downtown Olean to develop with higher intensity mixed-use development that can support walkability and a vibrant urban environment. The desired development pattern includes buildings of between 28 and 110 feet in height, built up to the front and corner side lot lines to frame the public space of the street, with ground-story commercial uses and upper-story commercial and residential uses.

2.2.2. Applicability

All development in the City Center (CC) zoning district must comply with the form and dimensional standards of this section, as well as any applicable standards in the following sections:

Sec. 4.1. Principal Uses

Sec. 4.2. Accessory Uses

Sec. 5.1. Parking and Access

Sec. 5.2. Landscape

Sec. 5.3. Fences and Walls

Sec. 5.4. Lighting

Sec. 5.5. Signs

2.2.3. Lots

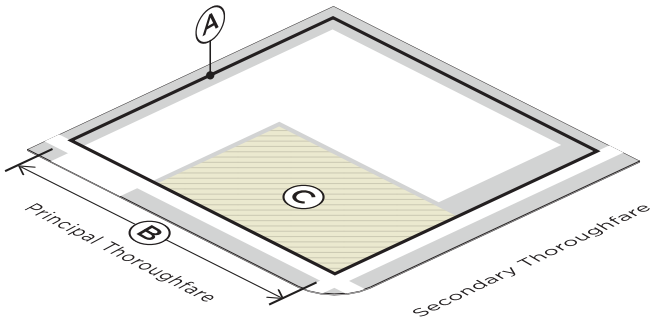

Lot Dimensions

A	Lot area (min)	1,500 SF
B	Lot width (min/max) [1]	15' / 125'

Lot Coverage

C	Lot coverage (max)	100%

[1] A principal building may not have a building width, measured along the front lot line, which exceeds the maximum lot width.

2.2.4. Setbacks

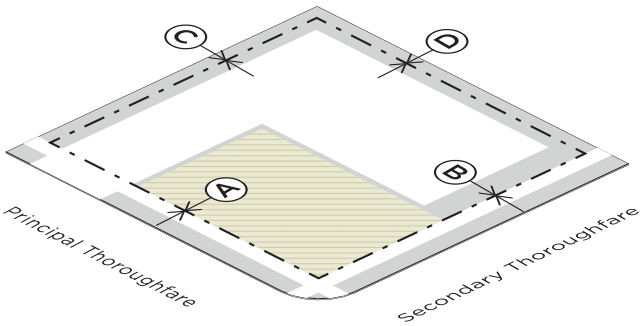

Building Setbacks

A	Front (min/max) [2]	0' / 0'
B	Corner side (min/max) [2]	0' / 0'
C	Interior side (min/max) [3, 4, 5]	0' / 20'
D	Rear (min) [5]	0'

[2] Non-commercial buildings are exempt from the maximum front and corner side setback requirement.

[3] All commercial buildings with frontage upon North Union Street between State Street and Main Street must be connected to one another, with no interior side setback, except to provide a pedestrian passage of a maximum width of 20 feet.

[4] Non-commercial buildings are exempt from the maximum interior side setback requirement.

[5] An interior side setback of at least 5 feet in depth, and/or rear setback of at least 15 feet in depth, is required where the applicable lot line abuts an R1, R2, or R3 zoning district.

2.2.5. Height

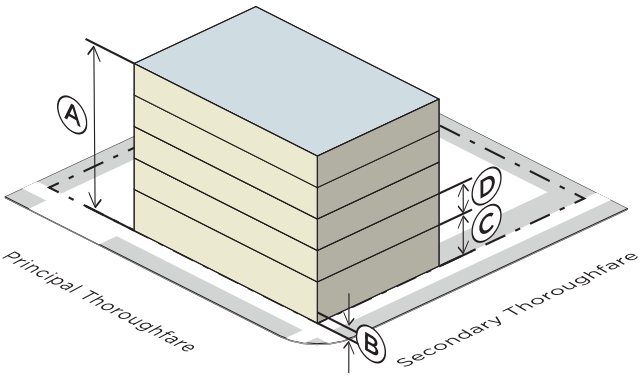

Building Height

A	Stories (min/max)	2 stories / 8 stories
	Height (min/max) [1]	28' / 110'

Story Height

B	Ground floor elevation (min/max)	0' / 2'
C	Ground story height, floor to floor (min)	16'
D	Upper story height, floor to floor (min)	12'

[1] Where any 40 foot or taller building is proposed on a site which abuts an R1, R2, or R3 zoning district, the upper stories of the building must be stepped back from the respective interior side or rear lot line by at least one foot for each additional foot above the first 40 feet of building height.

2.2.6. Transparency

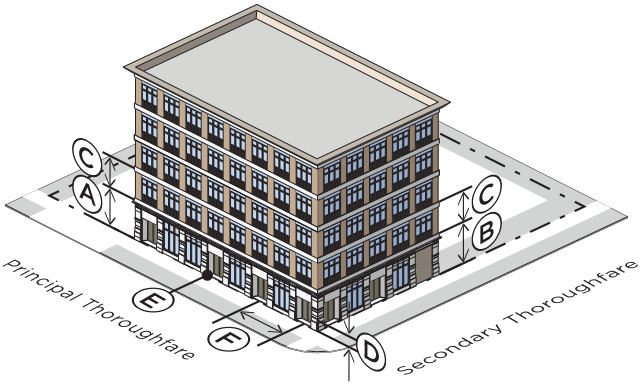

Transparency

A	Ground story transparency, front facade (min) [2]	70%
B	Ground story transparency, corner side facade (min) [2]	40%
C	Upper story transparency, front and corner facades (min) [2]	25%
D	Ground story window sill height, front and corner facades (min/max) [2]	0.5' / 2.5'

Pedestrian Access

E	Main entrance location (required)	Front facade
F	Entrance spacing along front facade [2]	At least 1 entrance for each 30' of facade width

[2] Non-commercial buildings are exempt from transparency, window sill height, and entrance spacing requirements.

2.2.7. Additional Standards

A. All new construction of commercial buildings and facade rehabilitation of exisiting commercial buildings in the City Center (CC) zoning district must comply with Article 3, Architectural Standards.

B. Site plan review and approval is required in accordance with Sec. 6.1.2, Site Plan Review.

Sec. 2.3. Neighborhood Center (NC)

2.3.1. Intent

The intent of the Neighborhood Center (CC) zoning district is to enable neighborhood main streets of the City of Olean to develop with medium intensity mixed-use development that can provide access to day-to-day amenities within walking distance. The desired development pattern includes buildings of between 28 and 45 feet in height, built up to the front and corner side lot lines to frame the public space of the street, with ground-story commercial uses and upper-story commercial and residential uses.

2.3.2. Applicability

All development in the Neighborhood Center (NC) zoning district must comply with the form and dimensional standards of this section, as well as any applicable standards in the following sections:

Sec. 4.1. Principal Uses

Sec. 4.2. Accessory Uses

Sec. 5.1. Parking and Access

Sec. 5.2. Landscape

Sec. 5.3. Fences and Walls

Sec. 5.4. Lighting

Sec. 5.5. Signs

2.3.3. Lots

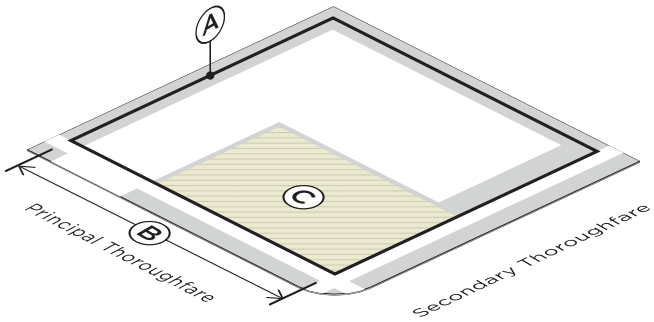

Lot Dimensions

A	Lot area (min)	1,500 SF
B	Lot width (min/max) [1]	15' / 75'

Lot Coverage

C	Lot coverage (max)	90%

[1] A principal building may not have a building width, measured along the front lot line, which exceeds the maximum lot width.

2.3.4. Setbacks

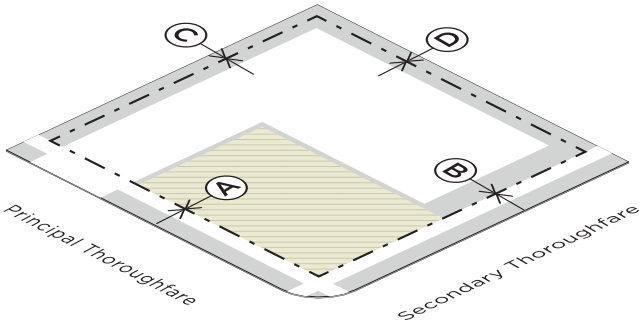

Building Setbacks

A	Front (min/max) [2]	0' / 0'
B	Corner side (min/max) [2]	0' / 0'
C	Interior side (min/max) [3, 4]	0' / 20'
D	Rear (min) [4]	0'

[2] Non-commercial buildings are exempt from the maximum front and corner side setback requirement.

[3] Non-commercial buildings are exempt from the maximum interior side setback requirement.

[4] An interior side setback of at least 5 feet in depth, and/or rear setback of at least 15 feet in depth, is required where the applicable lot line abuts an R1, R2, or R3 zoning district.

2.3.5. Height

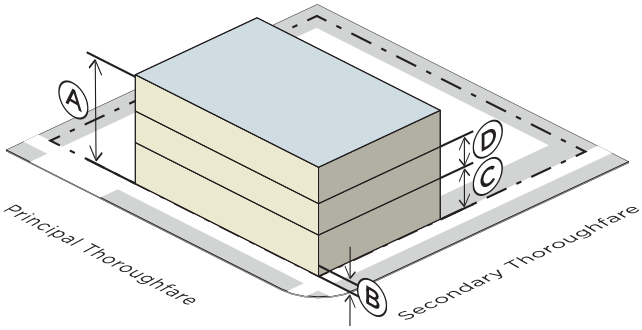

Building Height

A	Stories (min/max) [1]	2 stories / 3 stories
	Height (min/max) [1]	28' / 45'

Story Height

B	Ground floor elevation (min/max)	0' / 2'
C	Ground story height, floor to floor (min)	16'
D	Upper story height, floor to floor (min)	12'

[1] A one-story commercial shopfront addition to an existing non-commercial building is allowed, so long as the minimum height of the one-story commercial shopfront addition is 16 feet.

2.3.6. Transparency

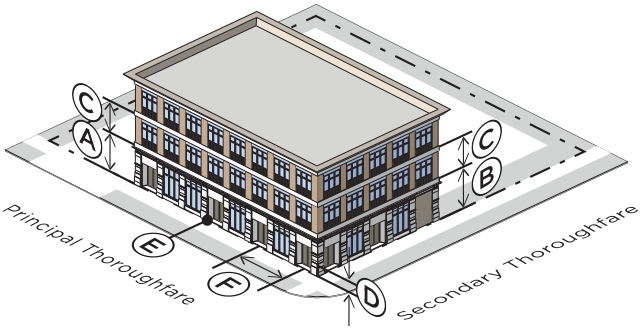

Transparency

A	Ground story transparency, front facade (min) [2]	70%
B	Ground story transparency, corner side facade (min) [2]	40%
C	Upper story transparency, front and corner facades (min) [2]	25%
D	Ground story window sill height, front and corner facades (min/max) [2]	0.5' / 2.5'

Pedestrian Access

E	Main entrance location (required)	Front facade
F	Entrance spacing along front facade [2]	At least 1 entrance for each 30' of facade width

[2] Non-commercial buildings are exempt from transparency, window sill height, and entrance spacing requirements.

2.3.7. Additional Standards

A. All new construction of commercial buildings and facade rehabilitation of exisiting commercial buildings in the Neighborhood Center (NC) zoning district must comply with Article 3, Architectural Standards.

B. Site plan review and approval is required in accordance with Sec. 6.1.2, Site Plan Review.

Article 3. Architectural Standards

Sec. 3.1. General

All new construction of commercial buildings and facade rehabilitation of exisiting commercial buildings in the City Center (CC) and Neighborhood Center (NC) zoning districts must comply with the standards of this section. These standards are intended to draw upon the architectural vocabulary of historic downtown Olean, while allowing for a contemporary interpretation of older building forms and styles scaled to fit the community. The Planning Board, as part of site plan review, may approve minor exceptions to these architectural standards, so long as the exceptions are consistent with their intent. Where the Planning Board determines that any proposed exception is inconsistent with the intent of these standards, an area variance will be required.

3.1.1. Building Mass

Buildings must generally be designed as square or rectangular blocks. However, subtle variations in height are encouraged in order to add interest to a facade, emphasize important architectural features, or accentuate a corner condition.

3.1.2. Facade Articulation

A. Buildings must be horizontally articulated, with a distinct base, shaft, and capital (bottom, middle, and top). Decorative moldings, cornices, or applied ornament of stone or cast concrete may be used to express the division between the base, shaft, and capital.

B. Buildings must be vertically articulated, with elements such as bays, mullions, columns, piers, pilasters, recessed entries, awnings, or other architectural treatments, to visually break up the massing of the ground story into segments no greater than 20 feet in width.

3.1.3. Historic Rehabilitation

Where practical, original historic features must be retained or restored. Alterations must not cover, infill, remove, or damage significant, original architectural elements of existing buildings. In cases where original architectural elements are in poor condition and cannot be retained or restored, replication of original elements with new elements is encouraged.

Sec. 3.2. Specific

3.2.1. Fenestration

A. Main Entrance

1. A main entrance must effectively address the adjacent public right-of-way and be given prominence on the building facade. This may be satisfied through the use of architectural features such as entranceway roofs, a chamfered corner, additional mouldings with expression lines, a bay of unique width, and/or sidelight windows, transom or fan window, or other adjacent windows.
2. A main entrance must be recessed from the front or corner side facade a minimum of five feet, preventing the doors from swinging into the sidewalk area, and may be recessed no more than 15 feet.

B. Windows

1. **Ground Story Windows**
   a. Ground story windows must be large display windows, allowing for maximum visibility into the shopfront.
   b. A transom, helping bring natural light into the interior of the shopfront, is encouraged.
2. **Upper Story Windows**
   a. Upper story windows must be vertical in proportion, and generally grouped with a rhythm relating to shopfront openings below.
   b. To highlight the wall thickness as an important architectural feature conveying a substantial, high-quality appearance, flush-mounted windows are prohibited on upper stories of masonry buildings.
   c. Architecturally appropriate lintels and projecting sills are encouraged on upper-story windows.

d. Where installed, shutters must be sized to provide complete coverage to the windows when closed and must include functioning hardware. Shutters must be wood or engineered wood.

C. Upper-Story Balconies

1. An upper-story balcony may either project or be recessed from a facade.
2. An upper-story balcony may project up to eight feet from the building facade and must be set back at least two feet from the curb line, any pole or post sign in the right-of-way, or the crown of any street tree.
3. An upper-story balcony must provide for at least 13 feet of vertical clearance from the sidewalk level.
4. An upper-story balcony must remain open on all sides except those along the exterior wall to which it is attached.

3.2.2. Shopfront Elements

A. Bulkhead. A bulkhead below all display windows, providing a visual anchor to the ground and protection and security to the glazed area, is required.

B. Fascia. A fascia board, defined as a horizontal band extending over the entirety of the shopfront and creating specific areas for signs, is required. The fascia board must be located above the ground-story display windows and below the finished floor of the second story.

1. An expression line, such as a cornice, decorative molding, or applied ornament of stone or cast concrete, should be placed above the fascia, providing a distinctive break between the ground story and upper story facade.
2. Vertical elements, such as consoles/corbels, situated at the ends of the fascia board and starting under the cornice and finishing below the fascia board, are encouraged.

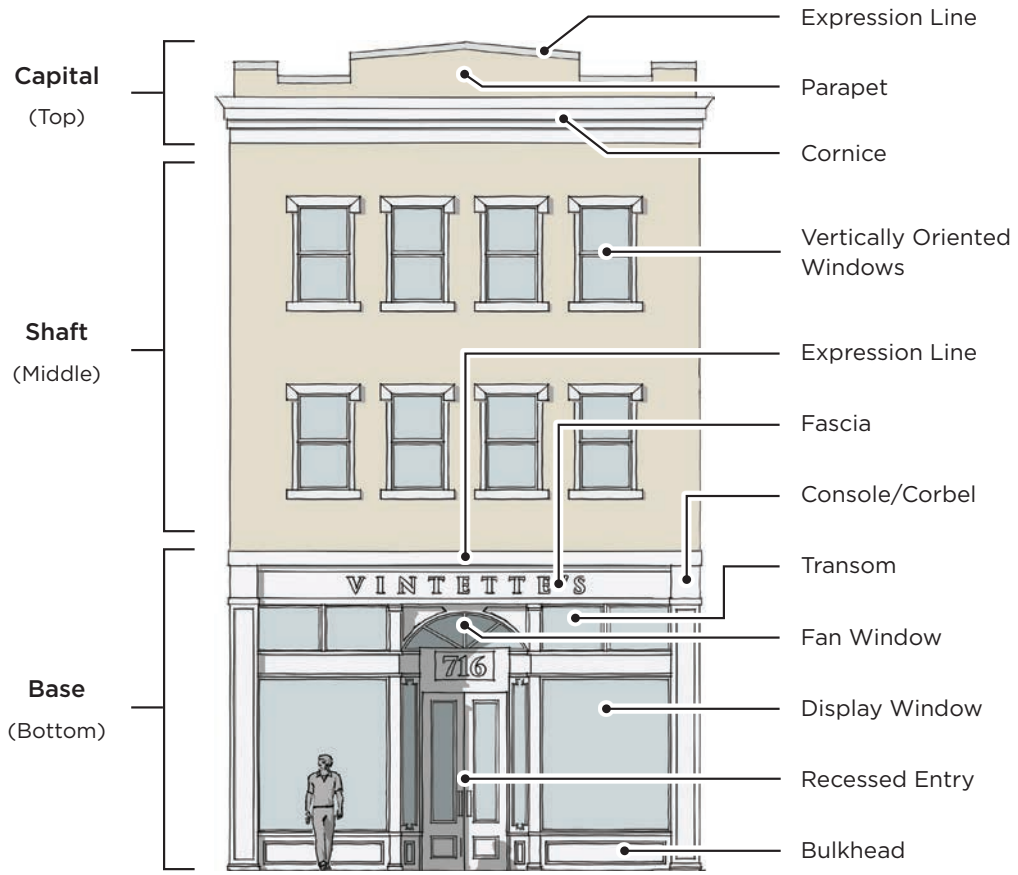

Figure 3A: Facade Elements

C. **Columns, Pilasters, or Piers.** Columns, pilasters, or piers, projecting slightly from the ground-story shopfront and providing visual and structural support for the building, are encouraged.

D. **Awnings and Canopies.** Awnings and canopies that extend over the sidewalk are encouraged. Where provided, awnings and canopies must follow the following standards:

1. Awnings. An awning is a wall-mounted, pitched cover extending outward from a building and providing protection from the weather.

   a. An awning that extends over a public right-of-way must project at least three feet and may project up to 15 feet from the building facade, and must be set back at least two feet from the curb, any pole or post sign in the right-of-way, or the crown of any street tree.

   b. An awning must provide for at least eight feet of vertical clearance from the sidewalk level, with an exception allowed for a valance of up to six inches in height. A valance is a short drapery, decorative board, or metal strip mounted across the bottom of an awning to conceal structural fixtures.

   c. A minimum of five feet of separation must be provided between support posts, if applicable.

   d. An awning must be securely attached to and supported by the building, and must fit the windows or doors to which the awning is attached. All frames and supports must be made of metal or similar rigid material. Frames and supports made of wood or plastic are prohibited.

   e. An awning must be made of a durable, weather-resistant material, such as canvas, canvas-like material, nylon, vinyl-coated fabric, or metal.

   f. Internally illuminated or back-lit awnings are prohibited.

   g. Awnings must be operable and open-ended.

   h. Rounded and hooped awnings are prohibited.

   i. Where an awning doubles as a sign, the awning sign must also follow the standards of Sec. 5.5.

2. **Canopies.** A canopy is a wall-mounted horizontal cover, extending outward from a building and providing protection from the weather.

   a. An canopy that extends over a public right-of-way must project at least three feet and may project up to 15 feet from the building facade, and must be set back at least two feet from the curb, any pole or post sign in the right-of-way, or the crown of any street tree.

   b. A canopy must provide for at least eight feet of vertical clearance from the sidewalk level.

   c. A minimum of five feet of separation must be provided between support posts, if applicable.

   d. A canopy must be securely attached to and supported by the building. All frames and supports must be made of metal or similar rigid material. Frames and supports made of wood or plastic are prohibited.

   e. Canopies may be clad with glass, metal, wood, or a combination of these materials.

   f. Where a canopy doubles as a sign, the canopy sign must also follow the standards of Sec. 5.5.

E. **Sidewalk Cafes.** Sidewalk cafes are encouraged. Where installed in a public right-of-way, a sidewalk cafe must comply with the standards of Chapter 21, Article VII, Sidewalk Cafes.

3.2.3. Roof Elements

A. The following roof standards apply to projects in the City Center (CC) zoning district:

1. A flat (low slope) roof must be used.

2. A flat roof must be enclosed by parapets of at least 42 inches in height, or as required to conceal mechanical equipment. Expression lines are encouraged to distinguish the parapet from the upper stories of the building and to define the top of the parapet.

B. The following roof standards apply to projects in the Neighborhood Center (NC) zoning district:

1. Either a flat (low slope), pitched, mansard, or gambrel roof must be used.

2. Where a flat roof is employed, the roof must be enclosed by parapets of at least 42 inches in height, or as required to conceal mechanical equipment. Parapets must be articulated as an explicit exterior wall making a visual transition to the sky through plain or elaborate profiles. Expression lines are encouraged to distinguish the parapet from the upper stories of the building and to define the top of the parapet.

C. Green roofs and roof gardens are encouraged.

3.2.4. Facade Materials

A. **General**

1. All principal and secondary facade materials must have demonstrated durability. Doors, windows, and associated hardware must be commercial grade.
2. Principal facade materials may be combined only horizontally, with the heavier below the lighter. Any transition in principal facade materials must be demarcated with a trim piece or expression line.
3. No facade material standards apply to interior side or rear facades. However, during site plan review, the Planning Board may apply such standards where the interior side or rear facades are visible from the adjacent public right-of-way.
4. Any facade material that is not expressly allowed, but also not expressly prohibited, must be individually approved by the Planning Board during site plan review. These alternative materials must be similar in nature to, or complementary with, traditional materials.

B. **Principal Facade Materials.** The front and corner side facades, with the exception of windows and doors, may be constructed of the following materials:

1. Brick.
2. Concrete—pre-cast panels made to look like stone.
3. Glass curtain wall, limited to above the second story.
4. Stone.
5. Terra cotta.
6. Wood siding or wood siding-like fiber cement.

C. **Secondary Facade Materials.** The front and corner side facades, with the exception of windows and doors, may be constructed with any of the following materials, so long as they are secondary facade materials (i.e., limited to trim, details, and other accent areas, or to add character to a ground-story shopfront):

1. Ceramic/porcelain.
2. Concrete—architectural concrete.
3. Concrete masonry units (CMUs)—highly polished or glazed.
4. Fiber cement.
5. Glass panels/glass block.
6. Metal.
7. Wood—millwork.

D. **Prohibited Materials.** The following materials are prohibited on front and corner side facades:

1. Concrete masonry units (CMUs)—plain, split face, or scored.
2. Exterior insulation and finish systems (EIFS).
3. Reflective wall surfaces, with a visible light reflectance (VLR) of 15% or more.
4. Vinyl/plastic.
5. Wood—unfinished or lumber-grade.

3.2.5. Refuse and Mechanical Areas

A. **Refuse Areas.** The storage of refuse and recyclables must be provided inside a fully-enclosed building or within an outdoor area enclosed by walls or opaque fencing. Any refuse area located outside of a fully-enclosed building must be sited as follows:

1. Refuse areas, including dumpsters and garbage cans, must be located in the rear yard adjacent to the principal building.
2. Refuse areas must be screened by a fence or enclosure of at least six feet in height on all sides, or as necessary to conceal any dumpsters or other refuse structures. Enclosures must be remain locked and closed, except when in use.

B. **Mechanical Areas**

1. Vents, air conditioners, and other utility elements, except where such elements are enclosed, camouflaged, screened, obscured, or otherwise not readily apparent to a casual

observer, are prohibited on front or corner side facades.

2. Roof-mounted mechanical equipment, with the exception of solar and wind energy systems, must be fully screened from view at ground level on all sides of the structure and, to the extent practicable, from adjacent buildings of similar height. Such mechanical equipment must be set back a distance of one and one-half times its height from the facade. Screens must be of durable, permanent materials and be constructed to a height of at least one foot above the height of the mechanical equipment.
3. Ground-mounted mechanical equipment, with the exception of solar and wind energy systems, must be screened with a fence, wall, or dense evergreen hedge, so that no portion is readily visible from any public right-of-way, with the exception of alleys. If ground-mounted mechanical equipment is screened by existing structures, fencing, or landscape, this requirement will be deemed to have been met.
4. Any existing mechanical equipment, which was lawfully established prior to the adoption of this Code, will be considered conforming, and may be repaired and replaced in-kind.

THIS PAGE INTENTIONALLY BLANK

Article 4. Uses

Sec. 4.1. Principal Uses

All principal uses in the City Center (CC) and Neighborhood Center (NC) zoning districts must comply with the standards of this section.

4.1.1. General

A. Use Regulation Table. Allowed uses in the City Center (CC) and Neighborhood Center (NC) zoning districts are also identified in Chapter 28, Zoning, Sec. 4.14, titled "Use regulation table."

B. Unlisted Uses

1. If a use is not listed as allowed or allowed with a special use permit, but is similar in nature and impact to a use that is listed in this Code, the Code Enforcement Officer may interpret the use as allowed or allowed with a special use permit, respectively.
2. If a use is not listed and cannot be interpreted by the Code Enforcement Officer as similar in nature and impact to a use that is listed in this Code, the use is deemed prohibited.

C. Accessory Uses. Accessory uses and structures are allowed in conjunction with principal uses in accordance with Sec. 4.2, Accessory Uses.

4.1.2. City Center (CC)

A. Within the City Center (CC) zoning district, the following principal uses are allowed:

1. Adult care facilities, where above ground story businesses.
2. Amusement game centers.
3. Antique and craft shops.
4. Art galleries.
5. Artisan industrial uses.
6. Banks and financial institutions, with no drive-through windows.
7. Barber and beauty shops.
8. Bars and night clubs.
9. Bed and breakfasts.
10. Bowling alleys.
11. Churches or places of worship.
12. Colleges and institutions of higher education.
13. Day care centers.
14. Dormitories.
15. Dry cleaning businesses.
16. Dwelling units above ground story businesses.
17. Funeral homes.
18. General business office uses.
19. Governmental uses.
20. Hotels and motels.
21. Inns.
22. Libraries.
23. Medical clinics.
24. Multi-family dwellings, where above ground story businesses.
25. Museums.
26. Newspaper and publishing facilities.
27. Non-profit membership clubs.
28. Non-vehicle repair shops.
29. Nursery schools.
30. Open-air markets.
31. Personal service establishments.
32. Photographic studios.
33. Professional offices.
34. Professional office buildings.
35. Public and private schools.
36. Public parks and recreational uses.
37. Public utilities or transportation uses.
38. Recreation, commercial.
39. Research laboratories.
40. Retail businesses and commercial uses other than those listed here.
41. Self-service laundries.

42. Senior citizen housing, where above ground story businesses.
43. Standard and fast food restaurants, with no drive-through windows.
44. Theaters.
45. Two-family dwellings, where above ground story businesses.
46. Vehicle sales and/or repair uses, where conducted wholly within an enclosed building.
47. Veterinary hospitals.

B. Within the City Center (CC) zoning district, the following uses are allowed only with a special use permit:

1. Commercial parking lots.
2. Parking structures.
3. Warehousing and wholesale and retail distribution centers including offices and showrooms.

4.1.3. Neighborhood Center (NC)

A. Within the Neighborhood Center (NC) zoning district, the following principal uses are allowed:

1. Adult care facilities, where above ground story businesses.
2. Amusement game centers.
3. Antique and craft shops.
4. Art galleries.
5. Artisan industrial uses.
6. Banks and financial institutions.
7. Barber and beauty shops.
8. Bars and night clubs.
9. Bed and breakfasts.
10. Bowling alleys.
11. Churches or places of worship.
12. Colleges and institutions of higher education.
13. Day care centers.
14. Dormitories.
15. Dry cleaning businesses.
16. Dwelling units above ground story businesses.
17. Funeral homes.
18. General business office uses.
19. Governmental uses.
20. Hotels and motels.
21. Inns.
22. Libraries.
23. Medical clinics.
24. Multi-family dwellings, where above ground story businesses.
25. Museums.
26. Newspaper and publishing facilities.
27. Non-profit membership clubs.
28. Non-vehicle repair shops.
29. Nursery schools.
30. Nursing and convalescent homes.
31. Open-air markets.
32. Personal service establishments.
33. Photographic studios.
34. Professional offices.
35. Professional office buildings.
36. Public and private schools.
37. Public parks and recreational uses.
38. Public utilities or transportation uses.
39. Recreation, commercial.
40. Research laboratories.
41. Retail businesses and commercial uses other than those listed here.
42. Self-service laundries.
43. Senior citizen housing, where above ground story businesses.
44. Standard and fast food restaurants.
45. Theaters.
46. Two-family dwellings, where above ground story businesses.
47. Vehicle sales and/or repair uses, where conducted wholly within an enclosed building.
48. Veterinary hospitals.

B. Within the Neighborhood Center (CC) zoning district, the following uses are allowed only with a special use permit:

1. Commercial parking lots.
2. Drive-in uses.
3. Gasoline filling stations.
4. Gasoline/grocery service marts.
5. Warehousing and wholesale and retail distribution centers including offices and showrooms.

Sec. 4.2. Accessory Uses

All accessory uses and structures in the City Center (CC) and Neighborhood Center (NC) zoning districts must comply with the standards of this section.

4.2.1. General

A. Accessory uses and structures must be:

1. Customarily found in association with the principal use.
2. Clearly incidental and subordinate to the principal use in terms of area and function.
3. Located on the same lot as the principal use (except for off-site accessory parking lots).

B. Accessory structures:

1. Must comply with the maximum building coverage requirements of the zoning district.
2. May encroach upon required interior side and rear setbacks, so long as they do not in the aggregate occupy more than 25% of the area any individual required setback.
3. Must not encroach upon required front or corner side setbacks.
4. Must be located at least two feet from lot lines, except where there is no required setback or where lot lines correspond to an alley.
5. Are limited to a maximum height of 18 feet, unless otherwise expressly allowed or restricted by this Code.

C. All accessory uses and structures must meet any applicable federal, state, and local requirements, including, but not limited to, licensing, health, safety, and building and fire code requirements. Any accessory structure of 100 square feet or more in size requires a building permit.

4.2.2. Specific

A. Home Occupations

1. A home occupation must be located within a fully enclosed building owned or occupied by a resident of the site. A home occupation may not be established prior to residential occupancy of the site by the operator of the home occupation.
2. The home occupation may not exceed 35% of the gross floor area of the principal dwelling unit.
3. No more than one non-resident employee may be present at any one time during the hours of operation. No more than two clients may be served at one time.
4. No more than one vehicle may be used in association with the home occupation. No commercial vehicle, defined as any vehicle with a gross vehicle mass rating of 10,000 pounds, the use of which is the transportation of commodities, merchandise, produce, freight, vehicles, animals, or passengers for hire, or which is used primarily in construction or farming, may be stored on site.
5. There may be no change in the outside appearance of the building or premises, or other visible evidence of the conduct of a home occupation, except for one sign of up to two square feet in sign area, mounted flush with and on the front facade of the building.
6. No display of products may be visible outdoors on the site. Direct sales and rentals of products off display shelves or racks are not allowed, although a person may pick up an order previously made by telephone, by internet, or at a sales meeting.
7. No business storage or warehousing of material, supplies, or equipment is allowed outdoors on the site.
8. Vehicle repairs or veterinary hospitals or kennels are not allowed as part of a home occupation.
9. No processes or equipment may be used that creates heat, noise, glare, dust, smoke, fumes, odors, or vibration detectable off the property.

B. Outdoor Display

1. Outdoor display of products actively available for sale is allowed, and may encroach upon any required setback, as well as forwards of the front building line of the principal structure.
2. Outdoor display must provide for a minimum of five feet of sidewalk clearance at all times.
3. The products on display must be removed and placed inside a fully-enclosed building at the end of each business day.

C. Private Parking Lots. Private parking lots must comply with the standards of Sec. 5.1.3, Vehicle Access and Parking.

D. Satellite Dish Antennas

1. A satellite dish antenna must be permanently installed as building-mounted or ground-mounted structures. Satellite dish antennas must not be mounted on a portable or moveable structure.
2. Subject to operational requirements, the satellite dish antenna must be of a neutral color, such as white or grey. No additional signs or advertising are allowed on the satellite dish antenna, with the exception of the logo of the satellite dish service provider or manufacturer.
3. Satellite dish antennas not in active service must be removed within 30 days of ending the service subscription. Proof of active service is demonstrated by a current invoice, or active contract, demonstrating such service to be in effect.
4. A building-mounted satellite dish antenna may not be installed on a front or corner side facade, except where such placement is required for reception of an acceptable signal, according to a written statement from a licensed, authorized installer on company letterhead that includes the installer's signature.
5. A ground-mounted satellite dish antenna of more than one meter in diameter must be set back from all lot lines a distance at least equal to the height of the dish. A roof-mounted satellite dish antenna of more than one meter in diameter must be located at least five feet from the roof edge.
6. Satellite dish antennas must meet all manufacturer specifications, be of non-combustible and corrosive-resistant material, and be erected in a secure, wind-resistant manner. Every antenna must be adequately grounded for protection against a direct strike by lightning.

E. Solar Energy Systems

1. A solar energy system must not obscure architectural details or features.
2. Building-Mounted Systems
   a. A roof-mounted solar energy system may project no more than 12 feet above the roof surface, and must be placed at least two feet from the roof edge.
   b. A facade-mounted solar energy system is allowed only on interior side and rear facades, and may either be applied flat against the facade or project off the facade a maximum of three feet.
3. Ground-Mounted Systems
   a. A ground-mounted solar energy system is limited to a maximum height of 12 feet.
   b. Power transmission lines from a ground-mounted solar energy system to any structure must be located underground, where possible, and completely shielded against shock hazard.

F. Wind Energy Systems

1. A wind energy system, where an accessory to a principal use or building, must not exceed a rated capacity of 500 kW.
2. A wind energy system may be located only in interior side or rear yards or on rooftops.
3. A wind energy system may be erected only up to the minimum height required to ensure proper function; i.e., at least 30 feet above any obstruction within a 500 foot radius, including the structure to which the system is mounted and the surrounding tree height.
4. The wind energy system must be located a distance of 110% of the turbine height from lot lines, except where written permission is obtained from the owners of the affected adjoining properties at the time of application. Turbine height is measured from the base of the tower to the top of the prop at maximum vertical rotation.
5. Power transmission lines from a ground-mounted wind energy system to any structure must be located underground, where possible, and completely shielded against shock hazard.

Article 5. Site Development

Site development in the City Center (CC) and Neighborhood Center (NC) zoning districts must comply with the standards of this section.

Sec. 5.1. Parking and Access

5.1.1. Pedestrian Access

Any development which involves new construction of a principal building, expansion of an existing principal building by 2,500 square feet or more, substantial renovation of an existing principal building, or a change of use, must provide pedestrian facilities in accordance with this section.

A. Pedestrian facilities must be provided connecting main entrances to parking, adjacent public rights-of-way and transit stops, and all uses on a site that allow for public access.

B. Pedestrian facilities must consist of accessible, easily discernible, and ADA-compliant walkways of at least five feet in width. The pedestrian facilities must be paved with a fixed, firm, and non-slip material. Pervious surface materials are encouraged.

C. Pedestrian facilities providing cross-access between abutting lots are encouraged.

5.1.2. Bicycle Access and Parking

Any development which involves new construction of a principal building, expansion of an existing principal building by 2,500 square feet or more, substantial renovation of an existing principal building, or a change of use, must provide bicycle parking in accordance with this section.

A. Required Bicycle Parking. Table 5A: Bicycle Parking identifies the minimum number of short-term bicycle parking spaces required per use. If the use is not listed, no bicycle parking is required. Short-term bicycle parking accommodates visitors, customers, messengers, and other persons who intend to depart within two hours or less.

B. Bicycle Parking Calculation. The required minimum number of spaces is calculated as follows:

1. The number of bicycle parking spaces, not the number of bicycle parking fixtures, is calculated to determine compliance; i.e., a single bicycle rack that is designed for parking two bicycles is counted as two bicycle parking spaces.
2. A minimum of two bicycle parking spaces must be provided at each site where bicycle parking is required.
3. When more than one principal use is on a site, the required bicycle parking for the site is the sum of the required parking for the individual principal uses.
4. When more than one principal building is on a site, the required bicycle parking is calculated individually for each principal building.
5. Where the City of Olean has provided bicycle parking within 50 feet of, and clearly visible from, the main entrance of the use served, the City of Olean-provided bicycle parking spaces are calculated toward the required number of spaces for such use.
6. After the first 20 bicycle parking spaces are provided for any individual prinipcal use or principal building, no additional bicycle parking is required.

C. Bicycle Parking Parameters

1. A bicycle parking space must be at least six feet long and two feet wide with a five foot access aisle.
2. A bicycle parking space must be placed within 100 feet of, and clearly visible from, the main entrance to the use served. If required bicycle parking is not visible from the street or public entrance, a sign must be posted at the public entrance indicating the location of the parking. The D4-3 sign of the Manual On Uniform Traffic Control Devices (MUTCD) is recommended.

Table 5A: Bicycle Parking

PRINCIPAL USE	REQUIRED BICYCLE PARKING SPACES (MINIMUM)
Adult care facilities	1 per 10 beds
Amusement game centers	1 per 3,000 SF of gross floor area
Antique and craft shops	1 per 3,000 SF of gross floor area
Art galleries	1 per 3,000 SF of gross floor area
Artisan industrial uses	1 per 10,000 SF of gross floor area
Banks and financial institutions	1 per 10,000 SF of gross floor area
Barber and beauty shops	1 per 3,000 SF of gross floor area
Bars and night clubs	1 per 3,000 SF of gross floor area
Bowling alleys	1 per 10,000 SF of gross floor area
Colleges and institutions of higher education	1 per classroom
Commercial parking lots	1 for each 20 non-accessory vehicle parking spaces
Day care centers	1 per 3,000 SF of gross floor area
Dormitories	1 per 5 beds
Dry cleaning businesses	1 per 3,000 SF of gross floor area
General business office uses	1 per 10,000 SF of gross floor area
Governmental uses	1 per 10,000 SF of gross floor area
Hotels and motels	1 per 5 beds
Inns	1 per 5 beds
Libraries	1 per 10,000 SF of gross floor area
Museums	1 per 10,000 SF of gross floor area
Newspaper and publishing facilities	1 per 10,000 SF of gross floor area
Non-profit membership clubs	1 per 3,000 SF of gross floor area
Non-vehicle repair shops	1 per 3,000 SF of gross floor area
Open-air markets	1 per 10 market stalls
Parking structures	1 for each 20 non-accessory vehicle parking spaces

Table 5A: Bicycle Parking (continued)

PRINCIPAL USE	REQUIRED BICYCLE PARKING SPACES (MINIMUM)
Personal service establishments	1 per 3,000 SF of gross floor area
Photographic studios	1 per 3,000 SF of gross floor area
Professional offices	1 per 10,000 SF of gross floor area
Professional office buildings	1 per 10,000 SF of gross floor area
Public and private schools	1 per classroom
Public parks and recreational uses	2 per acre
Recreation, commercial	1 per 10,000 SF of gross floor area
Research laboratories	1 per 10,000 SF of gross floor area
Retail businesses and commercial uses other than those listed here	1 per 3,000 SF of gross floor area
Self-service laundries	1 per 3,000 SF of gross floor area
Standard and fast food restaurants	1 per 3,000 SF of gross floor area
Theaters	1 per 20 seats or 40 feet of bench seating

3. All bicycle racks must be:
   a. Securely anchored.
   b. Able to support the bicycle frame in at least two places to prevent the bicycle from falling over.
   c. Configured to allow locking of the frame and at least one wheel with a U-lock.
   d. Constructed of materials that resist cutting, rusting, bending, or deformation.
4. Any required bicycle parking provided in a structure or under cover must be:
   a. Provided at ground level.
   b. Provided free of charge.
   c. Clearly marked as bicycle parking.
   d. Separated from vehicle parking by a physical barrier to minimize the possibility of parked bicycles being hit by a vehicle.
5. A bicycle rack may be erected on a public sidewalk, provided that the bicycle rack is situated wholly within the furnishing zone of the sidewalk and approval is granted by the Director of Public Works. The furnishing zone is the portion of the sidewalk, between the unobstructed walking area and two feet from the curb, used for street trees, landscape, street lights, and site furnishings.
6. All bicycle parking facilities must be constructed in accordance with the Bicycle Parking Guidelines of the Association of Pedestrian and Bicycle Professionals.

D. **Waivers.** The Planning Board may issue a waiver of bicycle parking minimums, in whole or part, if an applicant shows, through a letter of concurrence furnished by a licensed traffic engineer or AICP-certified city planner, that the minimum required number of bicycle parking spaces exceeds the probable demand.

5.1.3. Vehicle Access and Parking

All off-street vehicle parking facilities must comply with the standards of this section.

A. **Parking Requirement.** No specific number of off-street vehicle parking spaces is required. However, during site plan review, the applicant must demonstrate that a project will make reasonable efforts to provide safe and adequate vehicle parking, whether on-site or off-site.

B. **Accessibility.** All vehicle parking lots and parking structures must conform with the ADA Standards for Accessible Design and ADA Accessibility Guidelines for Buildings and Facilities published by the United States Access Board.

C. **Parking Access**

1. All off-street vehicle parking must have direct access to a public right-of way through an alley, driveway, or permanent access easement.
2. Where an alley with a right-of-way width of at least 18 feet is provided, all vehicle access must take place from the alley.
3. Entries for parking must be located along a corner side or rear facade, where possible.
4. A curb cut for off-street vehicle access and parking is prohibited along North Union Street between State Street and Main Street.

D. **Parking Location.** Any off-street parking must be located wholly within a rear yard or parking structure. No off-street parking spaces, drive aisles may be located within 30 feet of the right-of-way-line of North Union Street between State Street and Main Street.

Table 5B: Parking Space and Drive Aisle Dimensions

STALL ANGLE	STALL WIDTH (MIN) A	STALL DEPTH (MIN) B	SKEW WIDTH (MIN) C	DRIVE AISLE WIDTH, 1-WAY (MIN) D	DRIVE AISLE WIDTH, 2 WAY (MIN) E	VERTICAL CLEARANCE (MIN)
0 degrees (Parallel)	8’	18’	8’	11’	22’	7’ 6”
30 degrees	9’	15’	16’ 6”	11’	--	7’ 6”
45 degrees	9’	17’ 9”	11’ 8”	11’ 10’	--	7’ 6”
60 degrees	9’	19’	9’ 6”	13’ 6”	--	7’ 6”
90 degrees (Head-in)	9’	18’	8’ 3”	--	24’	7’ 6”

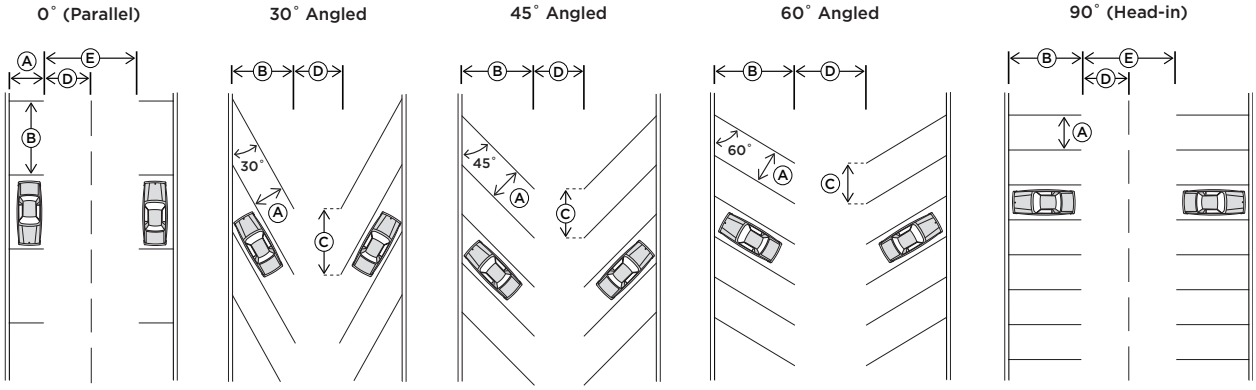

E. **Vehicle Circulation**

1. All parking lots and structures must be designed so that vehicles enter or leave a parking space without having to move any other vehicle. Parking lots and structures where vehicles are moved by employees of the facility are exempt from this requirement.
2. Parking lots and structures must be designed so that the driver of the vehicle proceeds forward into traffic rather than backs out into traffic.
3. Parking lots and structures must be designed so that a vehicle is not forced to back onto the public right-of-way to gain access from one parking aisle to another parking aisle.
4. Any parking row that does not provide two means of vehicle egress must provide, at the closed end, a space designated as a turn-around area. This space must be located at the end of a parking row, be designed with a minimum dimension of nine feet in width by nine feet in depth, and include a "No Parking" sign. Parking lots of less than 20 parking spaces are exempt from this provision.
5. Vehicle circulation providing cross-access between abutting lots is encouraged.

F. **Parking Space and Drive Aisle Dimensions.** All off-street parking spaces and drive aisles must comply with the minimum dimensional standards shown in Table 5B: Parking Space and Drive Aisle Dimensions, with the following exceptions:

1. Motorcycle and scooter parking spaces must measure at least four feet in width and eight feet in depth.
2. Mechanical access parking is exempt from parking stall and drive aisle dimensional requirements.

G. **Off-Site Parking.** Accessory parking is allowed on an off-site lot within one-quarter mile (1,320 feet) of the use served, measured by closest walking distance from the main entrance to the off-site parking lot. Parking provided by valet service is not subject to the maximum distance requirement. No off-site accessory parking lot may be located within an R1, R2, or R3 zoning district.

H. **Parking Surfaces**

1. All driveways, parking spaces, drive aisles, and loading areas must be surfaced with a fixed, firm, and non-slip material, capable of withstanding the weight of vehicles and their loads.
2. Pervious surface materials are encouraged.
3. Surface materials with a Solar Reflectance Index (SRI) of at least 29 are encouraged.

I. **Curb Cuts and Driveways**

1. Curb cuts and driveways must be located to minimize conflict with pedestrian, cyclist, and vehicle traffic on the abutting public right-of-way. No curb cut or driveway is allowed within 30 feet of any public right-of-way intersection.
2. The number and width of curb cuts must be the minimum needed to provide reasonable access to the site. A single-lane driveway may not exceed 12 feet in width, and a double-lane driveway may not exceed 24 feet in width.
3. Portions of driveways that are located within the public right-of-way must be constructed in conformance with specifications set forth by the Director of Public Works.

J. **Parking Lots**

1. No parking lot may have a grade in excess of 10%.
2. Parking spaces must be delineated with paint or similar method, and maintained in clearly visible condition. Parking spaces for the mobility-impaired must be identified with the appropriate sign and visible at all times.
3. Wheel stops, bumper guards, or other alternatives, which are properly anchored and secured, must be provided to prevent vehicles from damaging or encroaching upon any sidewalk, landscape, fence, wall, or structure.
4. A designated snow storage area must be provided in any parking lot of 20 or more spaces.
5. Pedestrian Walkways
   a. All parking lots with three or more double-loaded rows must provide internal pedestrian walkways within the parking area and outside of the parking row.
      i. The walkway must be a minimum of eight feet in width. Walkways may be reduced to five feet in width if designed as a grade separated walkway with landscape buffers on either side.
      ii. One walkway is required for every three double loaded aisles.
      iii. The walkway must be located within the parking area to serve the maximum number of parking spaces.

b. Walkways must provide direct connections to building entrances from the spaces furthest from the entrance. At least one walkway must provide a direct connection between the building entrances and the adjacent public rights-of-way and trails.

c. Walkways must be clearly marked with high-visibility striping, such as continental striping (24 inch vertical white stripes spaced 24 inches apart), or through the use of alternative materials, such as pavers. Where walkways cross a drive aisle, the walkway must have a continuous surface treatment across the drive aisle.

6. All parking lots must be landscaped in accordance with Sec. 5.2.2, Parking Lot Landscape.

7. Parking lot luminaires, intended to illuminate areas for vehicle travel and parking, may be no more than 25 feet in height, and must comply with Sec. 5.4, Lighting.

8. All traffic control signs must be installed in accordance with the Manual for Uniform Traffic Control Devices (MUTCD), plus the New York State Supplement.

K. Parking Structures

1. Internal circulation and parking levels must be oriented so that a horizontal, rather than sloped, plane faces the principal thoroughfare abutting the site.

2. Vehicle access points to a parking structure must take place from the corner side or rear facades, where possible. Vehicle access is prohibited along any facade fronting North Union Street between State Street and Main Street.

3. Any parking structure must be designed so that at least 75% of the linear width of the ground-story front facade, measured from building corner to building corner and excluding pedestrian and vehicle entries, is designed for commercial spaces. Each commercial space must have a minimum depth of 30 feet, measured from the front facade.

4. A parking structure must comply with Article 3, Architectural Standards.

L. Mechanical Access Parking. Mechanical access parking is allowed within parking structures and parking lots.

M. Transportation Demand Management

1. Where any development project of greater than 10,000 square feet of gross floor area cannot feasibly provide on-site or off-site vehicle parking, the applicant must submit and implement a Transportation Demand Management (TDM) plan, prepared by a licensed traffic engineer or AICP-certified city planner. A TDM plan must be reviewed and approved, approved with modifications, or disapproved by the Planning Board during site plan review. No building permit or certificate of compliance will be granted prior to approval of a TDM plan.

2. Submittals. The TDM plan must include the below information.

a. The anticipated travel demand for the project.

b. TDM strategies that will be employed to reduce single-occupancy vehicle trips generated by the project, reduce vehicle miles travelled by site users, and promote transportation alternatives such as walking, cycling, ridesharing, and transit.

c. Mode share objectives that will result from implemented TDM strategies.

3. Plan. TDM strategies may include, but are not limited to, the following:

a. Walking, cycling, ridesharing, and transit promotion and education.

b. Parking cash-out programs or unbundled parking/market rate pricing.

c. Enhanced bicycle parking and services (above the minimum required).

d. Support for car-share and bike-share services and facilities.

e. Carpooling or vanpooling programs or benefits.

f. Free or subsidized transit passes, transit-to-work shuttles, or enhanced transit facilities (such as bus shelters).

g. Guaranteed ride home (GRH) programs.

h. Provision for alternative work schedules (i.e., flextime, compressed work week, staggered shifts, telecommuting).

i. Promotion of "live near your work" programs.

j. Public right-of-way improvements adjacent to the site that will help encourage transportation alternatives.

k. Designation of an on-site employee and/or resident transportation coordinator.

l. Membership in a Transportation Management Association (TMA).

4. Performance Objectives. The TDM plan must include performance objectives to minimize single-occupancy vehicle trips and increase utilization of transportation alternatives, taking into account the opportunities and constraints of the site and the nature of the development.

5.1.4. Loading Areas

Any loading area must comply with the standards of this section.

A. **Loading Requirements.** Any development that involves new construction of a principal building of at least 50,000 square feet in gross floor area and that is expected to regularly handle materials or merchandise carried by vehicles rated by the Federal Highway Administration (FHWA) as "heavy duty" (i.e., Class 7 or higher and with a gross trailer weight rating of over 26,000 pounds), must provide off-street loading facilities in accordance with this section. This requirement does not apply if an applicant shows, through a letter of concurrence from the Director of Public Works, that on-street loading facilities are adequate.

B. **Loading Area Standards**

1. Loading areas must be separated from pedestrian facilities.

2. No loading berth may be located on a front facade, and no loading area may be located in a front yard.

3. Loading and unloading activity may not encroach upon a public right-of-way, except where specifically designated by the Director of Public Works.

4. Loading area perimeters must be landscaped as follows:

a. Where any loading area is located along, within 50 feet of, and visible from a public right-of-way other than an alley, the parking lot must be screened by a Type A landscape buffer, per Sec. 5.2.3, Landscape Buffers.

b. Where any loading area is located along, within 50 feet of, and visible from an interior side or rear lot line that abuts an R1, R2, or R3 zoning district, the parking lot must be screened by a Type B landscape buffer, per Sec. 5.2.3, Landscape Buffers.

Sec. 5.2. Landscape

Any landscape installation must comply with the standards of this section. Where a development project is subject to site plan review, a landscape plan must be submitted that is consistent with the standards of this section.

5.2.1. General

A. **Selection**

1. Plant materials must be hardy to regional climate conditions per the U.S. Department of Agriculture's Plant Hardiness Zone Map, as well as to individual site microclimates.

2. No plant material may be installed that is listed by the New York Invasive Species Council as an invasive species, defined by New York State statute to be any species that is non-native to the ecosystem under consideration, whose introduction causes or is likely to cause economic or environmental harm or harm to human health, and whose harm significantly outweighs any benefits.

B. **Installation**

1. Plant materials must be installed in accordance with the American Standard for Nursery Stock published by the American Nursery and Landscape Association (ANLA).

2. Plant materials must be installed in soil of sufficient volume, composition, and nutrient balance to sustain healthy growth.

C. **Irrigation**

1. Irrigation, beyond establishment, is not required. Where installed, permanent irrigation systems must:

a. Utilize low-volume irrigation emitters such as bubbler, drip irrigation, and soaker hose emitters.

b. Be equipped with a meter, backflow preventer, and weather-based irrigation controller.

2. Temporary spray irrigation systems may be used to establish seeded areas for grass and groundcover.

D. Maintenance

1. All plant materials must be maintained in a healthy, growing condition.
2. Any plant material that is significantly damaged, missing, disease-ridden, or dead must be abated by the property owner within one year or the next planting season, whichever occurs first.
3. Any landscape that is considered hazardous or unsafe, interferes with public utilities, is in conflict with required corner visibility, obstructs pedestrian or vehicular access, constitutes a traffic hazard, or is listed as an invasive species by the New York Invasive Species Council, must be abated by the property owner as soon as practical or within 30 days of notice by the Code Enforcement Officer. The Code Enforcement Officer may remove any landscape that is an immediate peril to persons or property summarily, without notice, and at the property owner's expense.

5.2.2. Parking Lot Landscape

Any new construction of a parking lot, expansion of an existing parking lot by 20 or more spaces, or reconstruction of an existing parking lot must be landscaped in accordance with this section.

A. Parking Lot Perimeter. Parking lot perimeters must be landscaped as follows:

1. Where any parking lot is located along, within 50 feet of, and visible from a public right-of-way other than an alley, the parking lot must be screened by a Type A landscape buffer, per Sec. 5.2.3, Landscape Buffers. The following are exceptions:
   a. In lieu of a Type A landscape buffer, a solid masonry wall may be installed at the right-of-way line of between two feet and three and one-half feet in height.
   b. In lieu of a Type A landscape buffer, dedicated spaces for market stalls or mobile food vendors may be provided adjacent to the right-of-way line.
2. Where any parking lot is located along, within 50 feet of, and visible from an interior side lot line that abuts an R1, R2, or R3 zoning district,

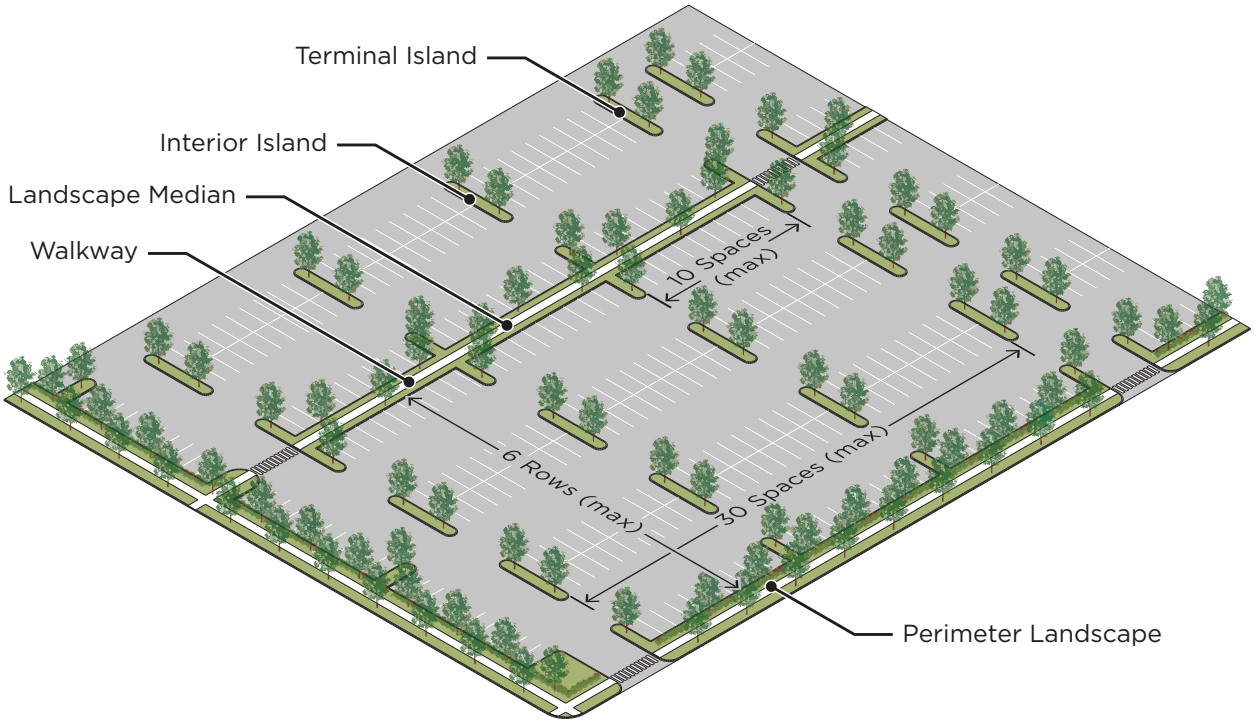

Figure 5A: Parking Lot Landscape

the parking lot must be screened by a Type A landscape buffer, per Sec. 5.2.3, Landscape Buffers.

3. Where any parking lot is located along, within 50 feet of, and visible from a rear lot line that abuts an R1, R2, or R3 zoning district, the parking lot must be screened by a Type B landscape buffer, per Sec. 5.2.3, Landscape Buffers.

B. **Parking Lot Interior.** Parking lot interiors containing 20 or more parking spaces must be landscaped as follows:

1. At least 10% of the interior of the parking lot, calculated as the total surface area of all parking spaces, drive aisles, and interior landscape, must be planted with landscape. Parking lot perimeter landscape required by Sec. 5.2.2.B is not counted toward the minimum interior parking lot landscape requirement.

2. At least one shade tree of a minimum caliper of two inches must be installed within the parking lot interior for every 10 parking spaces, and distributed so that no parking space is more than 100 feet from a tree. The following are exceptions to this requirement:

   a. An existing shade tree may fulfill this requirement, so long as the existing shade tree is at least four inches diameter at breast height (DBH), possesses a healthy and full canopy, has an unmolested critical root zone, and has incurred no damage that would undermine its long-term vitality and quality.

   b. In lieu of one shade tree, three ornamental trees of a minimum caliper of one and one-half inch may be installed.

3. Landscape islands must be installed as follows:

   a. A terminal island must be provided at the beginning and end of each parking row. No more than 30 parking spaces may be located between terminal islands. Interior islands must be used to break up parking spaces into groups of no more than 10 contiguous spaces.

   b. Interior islands and terminal islands must extend across the depth of the parking row. An interior or perimeter island must be at least eight feet in width and 150 square feet in area in the case of a single parking row or, in the case of a double parking row, at least eight feet in width and 300 square feet in area.

   c. At least one shade tree is required in each interior or terminal island that extends the length of a single parking row or, in the case of a double parking row, at least two shade trees are required.

4. Landscape medians must be installed as follows:

   a. A landscape median must be provided between every six parking rows.

   b. A landscape median must be at least seven feet in width and planted with landscape, including at least one shade tree for every 30 feet of median length. In lieu of one shade tree, three ornamental trees may be planted.

   c. A landscape median may also serve as the location for a sidewalk connecting the parking and the use served by the parking area, in which case the minimum width must be at least 12 feet.

5. All required plant materials within the parking lot interior must be maintained in a healthy, growing condition over their lifetime, or replaced as necessary.

5.2.3. Landscape Buffers

A landscape buffer must be provided where required by this section.

A. Landscape Buffer Types

1. A Type A landscape buffer must be at least seven feet in depth from from the lot line. At least three shade trees and 33 shrubs must be installed per 100 feet in linear width of the landscape buffer. In lieu of one shade tree, three ornamental trees may be installed.

2. A Type B landscape buffer must be at least 15 feet in depth from the lot line. At least six shade trees and 50 shrubs must be installed per 100 feet in linear width of the landscape buffer, and a solid fence of between six and seven feet must be located interior to the required landscape, furthest from the lot line. In lieu of one shade tree, three ornamental trees may be installed.

B. Required Locations

1. The perimeter of a parking lot requires landscape buffers in accordance with Sec. 5.2.2.A.

2. The perimeter of a loading area requires landscape buffers in accordance with Sec. 5.1.4.B.

C. Landscape Buffer Parameters

1. A landscape buffer must be located within the outer perimeter of the lot, parallel to and extending to the applicable lot line. A landscape buffer may not be located within the adjacent public right-of-way.
2. No building, accessory structure, or vehicle parking may encroach upon a landscape buffer. Pedestrian and vehicle access points, plus related signs, may encroach upon a landscape buffer.
3. Landscape must be of the following dimensions at installation:
   a. Shade trees must be of at least two inches caliper.
   b. Ornamental trees must be of at least one and one-half inch caliper.
   c. Shrubs must be of a five gallon container minimum.
4. Pre-existing, equivalent vegetation that is conserved within the landscape buffer may substitute for any required landscape installation, so long as the pre-existing vegetation is healthy and growing.
5. Any required trees or shrubs may be installed at varying distances to create a naturalistic landscape design, so long as the per linear foot requirement is applied as an average, and the landscape is arranged to provide sufficient screening.
6. All required plant materials within the landscape buffer must be maintained in a healthy, growing condition over their lifetime, and replaced where necessary.

Sec. 5.3. Fences and Walls

The construction of a new fence and wall, or reconstruction of at least 50% of any existing fence or wall, must comply with the standards of this section.

A. Alignment. A fence or wall, where located within 15 feet of a lot line, must be aligned parallel or radial to such lot line, helping to define the public and private realms.

B. Materials

1. Fences and walls must be constructed of permanent, durable materials, such as brick, stone, concrete, wood, iron, or steel.
2. No fence or wall may be erected of vinyl/plastic, chain link, barbed wire, concertina wire, razor wire, electrically charged wire, railroad ties, concrete masonry units, scrap metal, tarps, or any other material determined by the Code Enforcement Officer to be detrimental to the public health, safety, and welfare.

C. Height

1. The height of a fence or wall is measured from grade within two feet of the base of the fence or wall. An additional one foot of height is allowed, above the maximum height, for posts, columns, light fixtures, or other decorative details.
2. Fences or walls along front lot lines or within a front yard must not exceed four feet in height.
3. Fences or walls along corner side lot lines or within a corner side yard must must not exceed four feet in height, except that fences and walls may be up to six feet in height between the point of intersection of the corner side wall and rear wall of the principal building to the rear lot line.
4. Fences or walls along interior side lot lines or within an interior side yard must not exceed four feet in height, except that fences and walls may be up to six feet in height between the point of intersection of the interior side wall and front wall of the principal building to the rear lot line.
5. Fences or walls along rear lot lines or within rear yards must not exceed six feet in height.

D. Finish. All fence posts and related supporting members of a fence must be erected so that the finished sides of the fence face the adjacent property or right-of-way.

E. Maintenance. Fences and walls, including supports, must be maintained in a proper state of repair. Any damage to or deterioration of a fence or wall, whether due to vandalism, weather, age, loss of mortar, or peeling paint, must be repaired as soon as practicable or within 30 days of receipt of notice from the Code Enforcement Officer.

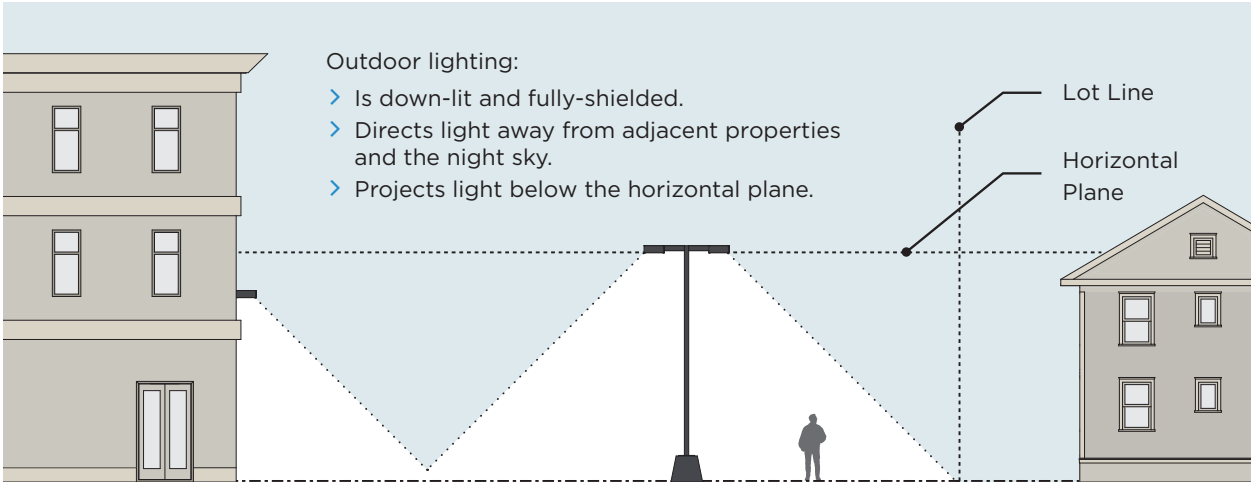

Figure 5B: Outdoor Lighting Standards

Sec. 5.4. Lighting

All outdoor lighting must comply with the requirements of this section.

5.4.1. Lighting Standards

All outdoor lighting must be down-lit and fully-shielded, so that direct light is directed toward areas that are intended to be lit, and directed away from adjacent properties and the night sky. A fully-shielded luminaire is a luminaire constructed and installed in such a manner that all light emitted by the luminaire, either directly from the lamp or a diffusing element, or indirectly by reflection or refraction from any part of the luminaire, is projected below the horizontal plane through the luminaire's lowest light-emitting part.

5.4.2. Exemptions

The following are exempt from the standards of this section:

A. Lighting for bridges, monuments, statuary, flags, and public buildings.

B. Sign illumination, which is addressed by Sec. 5.5, Signs.

C. Repairs to existing lighting, where no more than 25% of existing luminaires are repaired or replaced. Repairs include the reconstruction or renewal of any part of an existing luminaire, other than replacement of components such as lamps, capacitors, ballasts, or photocells.

D. Temporary special purpose lighting, such as lighting for special events, television broadcasts, or construction sites.

E. Underwater lighting in swimming pools and other water features.

F. Partly-shielded or unshielded luminaires at a main entrance (where less than two per entrance).

G. Temporary holiday lighting.

H. Solar-powered lighting used in landscape design and to illuminate walkways.

I. Lighting used under emergency conditions.

J. Lighting required by federal, state, or local regulations.

Sec. 5.5. Signs

All new, reconstructed, altered, or relocated signs must comply with the standards of this section.

5.5.1. General

A. Sign Permit

1. All sign types described in Sec. 5.5.2, Sign Types, require a sign permit before they may be

constructed, reconstructed, altered, or relocated. Signs described in Sec. 5.5.3, Exempt Signs, do not require a sign permit, except where a building permit is required for installation.

2. The following alteration and maintenance activities do not require a sign permit:

   a. Painting, cleaning, or other normal maintenance and repair of a sign, provided that no change is made to any structural or electronic component of the sign.

   b. Changing items of information, the message of an existing changeable or electronic message component of a sign, or the sign face within an existing sign structure, provided that no change is made to any structural or electronic component of the sign.

3. A sign that encroaches upon a public right-of-way, consistent with the standards of this section, requires the written authorization of the Director of Public Works.

B. On-Premise Signs. All sign copy must relate only to the name or nature of the business or establishment on the premises. Off-premise signs are prohibited.

C. Location

1. A sign may be erected on private property only with the written permission of the property owner.

2. No sign, other than signs placed by agencies of government or a sign whose placement is authorized by such agencies, may be erected or placed on public property.

3. No sign may be installed in a way that obstructs free and clear vision, or free use, of any public right-of-way, intersection, ingress or egress point, transit stop, parking space, drive aisle, driveway, building entrance, fire escape, standpipe, or accessibility ramp.

4. No sign may be placed so as to obstruct any window or door, with the exception of window signs placed in accordance with Sec. 5.5.3.S.

5. No sign may obscure architectural details or features.

D. Construction. All signs must be erected in compliance with the State Uniform Fire Prevention and Building Code and Energy Conservation Construction Code, as well as the following requirements:

1. Supports and braces must be designed as an integral part of the overall sign structure and hidden from public view to the extent technically feasible.

2. All signs attached to a building must be installed and maintained so that wall penetrations are watertight and do not exceed allowable stresses of supporting materials.

3. When a building-mounted sign is removed, the wall must be repaired and restored to its original condition prior to sign installation.

4. All signs and their supporting structures must be enclosed so as to prevent inhabitation by birds, rodents, insects, and other wildlife.

5. Materials for signs must be durable and capable of withstanding weathering over the life of the sign with reasonable maintenance. Glass forming any part of a sign, with the exception of exposed lamps, must be safety glass.

6. Signs constructed of fabric or fabric-like material must be held taut within frames.

7. Audio components are prohibited as part of any sign.

8. If a raceway is necessary, it must not extend in width or height beyond the area of the sign. A raceway must be finished to match the background surface to which it is attached, or integrated into the overall design of the sign.

9. All electrical fixtures, devices, circuits, conduits, raceways, or any apparatus used to illuminate any sign must be installed and maintained in compliance with the National Electric Code (NEC). A Nationally Recognized Testing Laboratory (NRTL) listing label number must be provided for any sign with electrical components.

E. Illumination Type. A sign may be externally illuminated, internally illuminated, or directly illuminated. An electronic message center (EMC) is allowed only to convey time, temperature, stock market quotations, or other information of a noncommercial nature. Each type of sign illumination must comply with the below standards.

1. External Illumination. An externally illuminated sign is characterized by the use of artificial light reflecting off its surface.

   a. External light sources intended to illuminate the sign face must be fully shielded and placed close to, and directed upon, the sign face.

b. Any light sources intended to illuminate surfaces behind a sign to produce a halo effect must be fully concealed from view.

2. Internal Illumination. An internally illuminated sign is characterized by the use of artificial light projecting through its surface.

   a. Internal illumination is limited to letters, numbers, symbols, and accents. No more than 50% of the total sign area may be internally illuminated. The remaining area of the sign face must remain opaque.

   b. All lamps intended for internal illumination must be fully concealed from view.

3. Direct Illumination. A directly illuminated sign is characterized by the use of exposed lamps, such as neon tubes or incandescent bulbs, that have no shielding and are visible to the eye.

   a. Direct illumination is limited to letters, numbers, symbols, and accents.

   b. Exposed lamps may be animated to create an effect of patterned illusionary movement, so long as the alternate or sequential activation of illuminated elements occurs on a cycle that exceeds one second. No more than one such sign is allowed per establishment.

4. Electronic Message Centers (EMCs). An electronic message center (EMC) is an electrically activated display whose variable message and/or graphic presentation capability can be electronically programmed by computer from a remote location.

   a. Each electronic message must be static and depicted for a minimum of eight seconds before changing. Any scrolling, fading in, dropping in, or similar moving copy changes are prohibited.

   b. An electronic message center that is malfunctioning must be turned off.

F. Light Intensity

1. The luminance of any sign must not exceed 5,000 nits during daylight hours, and 500 nits between dusk and dawn. Dusk and dawn are defined as, respectively, the time starting at one-half hour before apparent sunset, as determined by the National Oceanic and Atmospheric Administration (NOAA), for Olean for the particular date; and the time starting at one-half hour after apparent sunrise, as determined by the NOAA, for Olean for the particular date.

2. A sign that is designed to emit a luminance level exceeding 500 nits must have an automatic dimmer control that produces a distinct illumination change from a higher to a lower level for the time period between dusk and dawn.

G. Public Safety

1. No direct or reflected light from the primary light source of a sign may create hazards for pedestrians, cyclists, or operators of motor vehicles.

2. Colored light must not be used at a location or in a manner so as to be confused with or construed as traffic control devices or emegency services.

H. Maintenance

1. Signs and sign structures, together with their supports, braces, guy wires, anchors, and electrical components, must be maintained in a proper state of repair. Any damage to or deterioration of a sign must be repaired immediately or within 30 days of receipt of notice from the Code Enforcement Officer.

2. When an existing sign is removed, replaced, or repaired, all brackets, poles, wiring, and other supporting hardware that are no longer required must be removed, and any surfaces to which the sign may have been attached must be repaired or painted, immediately or within 30 days of receipt of notice from the Code Enforcement Officer.

3. All signs integral to a structure and announcing the building's original or historic name, year of construction, or architect, or containing identifying insignias, must be maintained, and may not be removed, altered, or covered. In cases where the original sign is in too poor of condition to repair or reuse, close replication of the original sign with a new sign is encouraged.

4. Where a sign is totally or partially illegible, where sign copy has been removed, or when an establishment to which the sign pertains has been discontinued for three or more months, the sign must be repaired, reused, or removed immediately or within 30 days of receipt of notice from the Code Enforcement Officer. If the property owner fails to repair, reuse, or remove the sign within the timeframe established by the Code Enforcement Officer, the sign may be removed by the City at the property owner's expense.

5. If a sign is in an unsafe or non-secure condition, the sign must be repaired or removed immediately or within three days of receipt of notice from the Code Enforcement Officer. The Code Enforcement Officer may remove any sign that is an immediate peril to persons or property summarily, without notice, and at the property owner's expense.

I. **Prohibited Signs.** The below listed signs, as well as any sign type not expressly allowed by this Code, are prohibited:

1. Mechanically activated signs, other than barber poles and clocks.
2. Signs or devices motivated by wind, thermal changes, or other environmental input, such as spinners, pinwheels, balloons, air-inflated signs, or other devices or displays that respond to naturally or artificially induced external motivation.
3. Signs on motor vehicles that are inoperable, do not display a current vehicle inspection sticker or license plate, are not principally used as a mode of transportation for business purposes, and/or are conspicuously parked or located on a lot for more than 24 hours to advertise a product or service, or to direct the public to a business or activity located on or off the premises.
4. Signs that are burned, cut, painted, pasted, or otherwise marked on or affixed to a tree, standpipe, fire escape, utility pole, trash receptacle, bench, or any other unapproved structure or surface.
5. Signs that simulate in color, size, or design, any traffic control sign or signal, or that make use of words, symbols, or characters in a manner that may interfere with, mislead, or confuse pedestrian, cyclist, or vehicular traffic.
6. Temporary off-premise signs.

J. **Nonconforming Signs.** A nonconforming sign that was legally established and maintained in compliance with the provisions of all applicable laws in effect at the time of original installation, but does not now comply with the provisions of this Code, may be repaired, altered, or relocated in accordance with Sec. 7.5, Nonconforming Signs.

5.5.2. Sign Types

This section describes the on-premise signs allowed in the City Center (CC) and Neighborhood Center (NC) zoning districts. This section does not apply to exempt signs described in Sec. 5.5.3, Exempt Signs.

A. **Number of Signs.** A maximum of two on-premise signs per establishment is allowed per right-of-way frontage, not counting sidewalk signs and skyline signs.

B. **Total Sign Area**

1. City Center (CC). The total sign area of signs per establishment may not exceed two square feet per one foot of linear width of front or corner side facade.
2. Neighborhood Center (NC). The total sign area of signs per establishment may not exceed one square feet per one foot of linear width of front or corner side facade.
3. The area of sidewalk signs and skyline signs are not counted toward the total sign area described in this section.

C. **Sign Location.** All signs, with the exception of sidewalk signs, must be building-mounted. Building-mounted signs must be attached to a front or corner side facade only.

D. **Sign Types.** The following pages address the standards that apply to each sign type.

1. Awning Sign

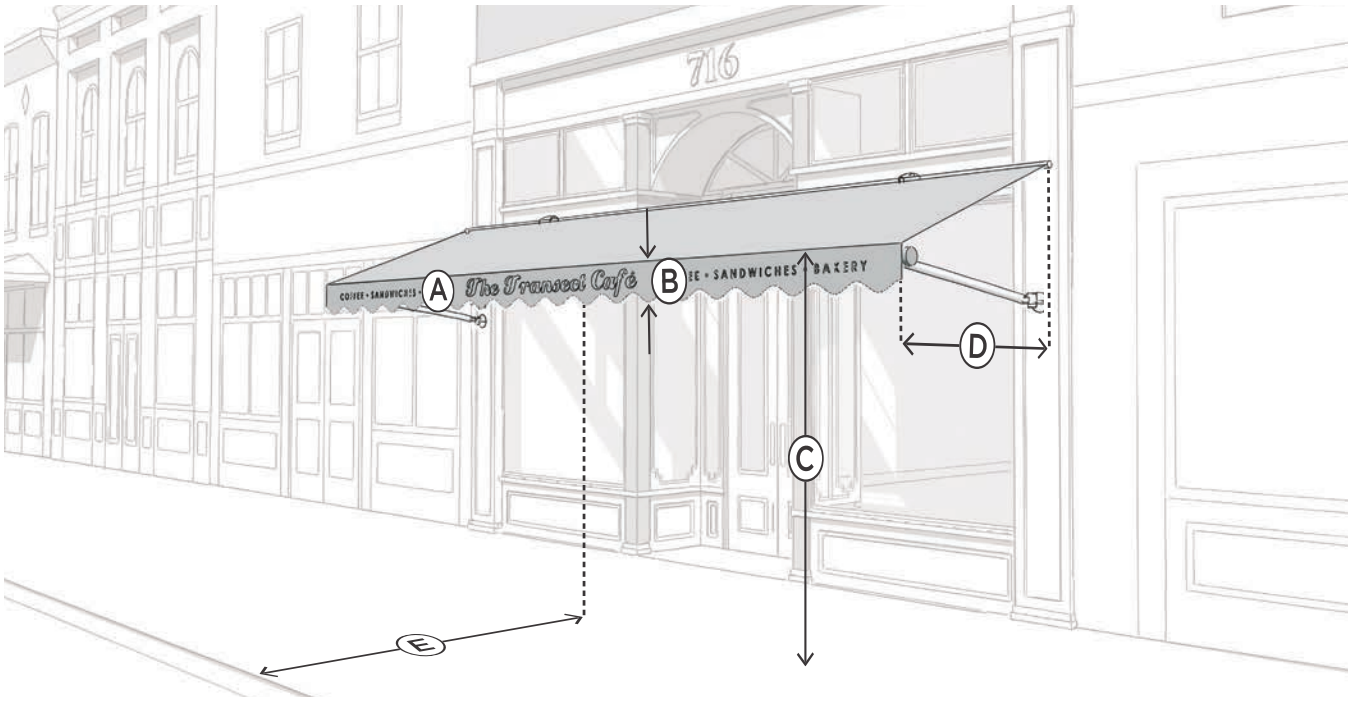

Description

An awning sign is a sign printed on any of the surfaces of an awning.

Dimensions

A	Area, awning sign (max)	25% of each awning surface, or 50% of the awning valance
B	Valence height (max)	0.5’
C	Vertical clearance from sidewalk level, not including valance (min)	8’
D	Projection from wall, including supports (max)	15’
E	Setback from curb, pole or post sign in right-of-way, or crown of street tree (min)	2’

Specific Standards

1. A maximum of one awning sign is allowed per awning surface. Only awnings on the ground story may contain signs.
2. Internally illuminated or back-lit awning signs are prohibited.
3. The awning on which an awning sign is placed must be in accordance with Sec. 3.2.2.D.

2. Blade Sign

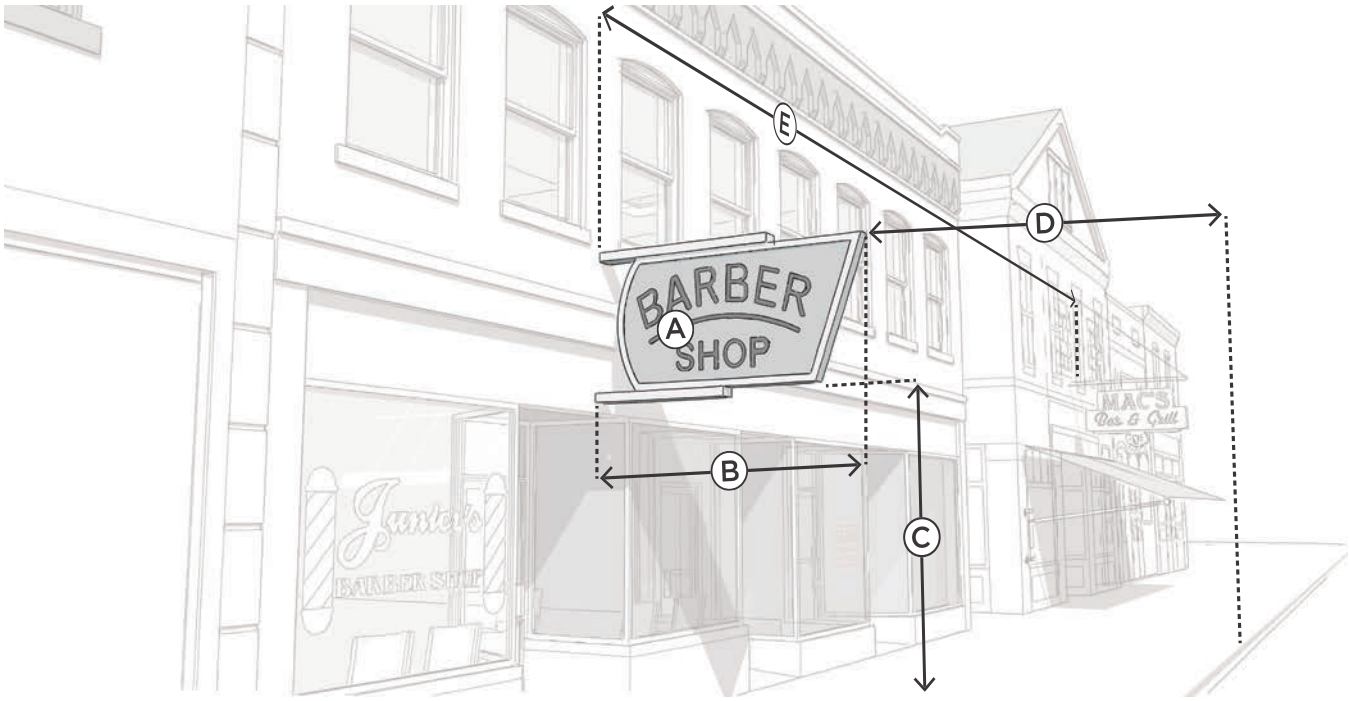

Description

A blade sign is a two-sided sign that projects outward from the exterior wall of a structure.

Dimensions

A	Area (max)	Refer to Sec. 5.5.2.B
B	Projection from wall, including supports (max)	5’
C	Vertical clearance from sidewalk level (min)	10’
D	Setback from curb, pole or post sign in right-of-way, or crown of street tree (min)	2’
E	Distance between blade signs (min)	15’

Specific Standards

1. A maximum of one blade sign is allowed per establishment per right-of-way frontage. Only establishments with a ground-story main entrance may have a blade sign.
2. The base of a blade sign must be placed below the finished level of the second story or, in the case of a one-story building, at least two feet below the highest peak of the roof. No portion of a blade sign may extend more than ten feet above the roof line.
3. A blade sign which is suspended to allow the sign to swing due to wind action may not exceed six square feet in area.

3. Canopy Sign

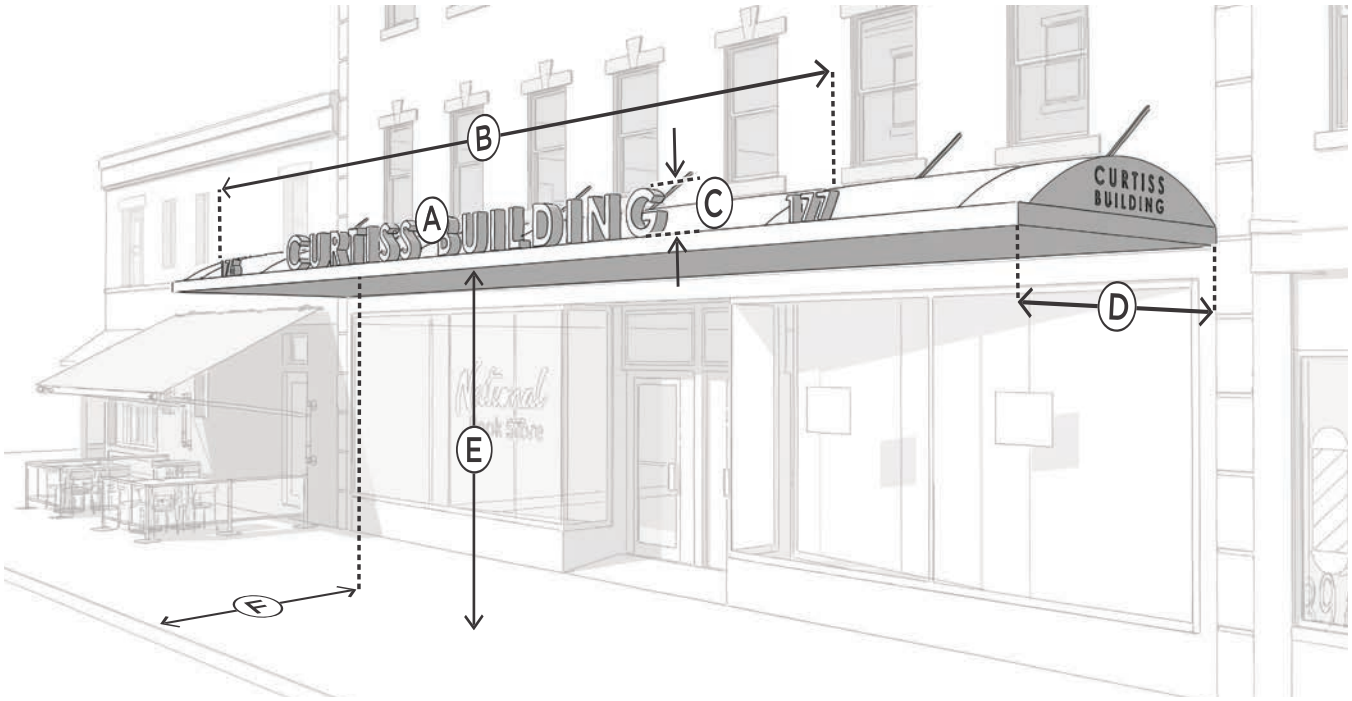

Description

A canopy sign is a sign attached above, below, or to the face of a canopy.

Dimensions

A	Area (max)	Refer to Sec. 5.5.2.B
B	Letter/number/logo width above canopy (max)	75% of canopy width
C	Letter/number/logo height above canopy (max)	2'
D	Projection from wall, including supports (max)	15'
E	Vertical clearance from sidewalk level (min)	10'
F	Setback from curb, pole or post sign in right-of-way, or crown of street tree (min)	2'

Specific Standards

1. A maximum of one canopy sign is allowed per establishment per right-of-way frontage.
2. The canopy on which a canopy sign is placed must be in accordance with Sec. 3.2.2.D.

4. Marquee Sign

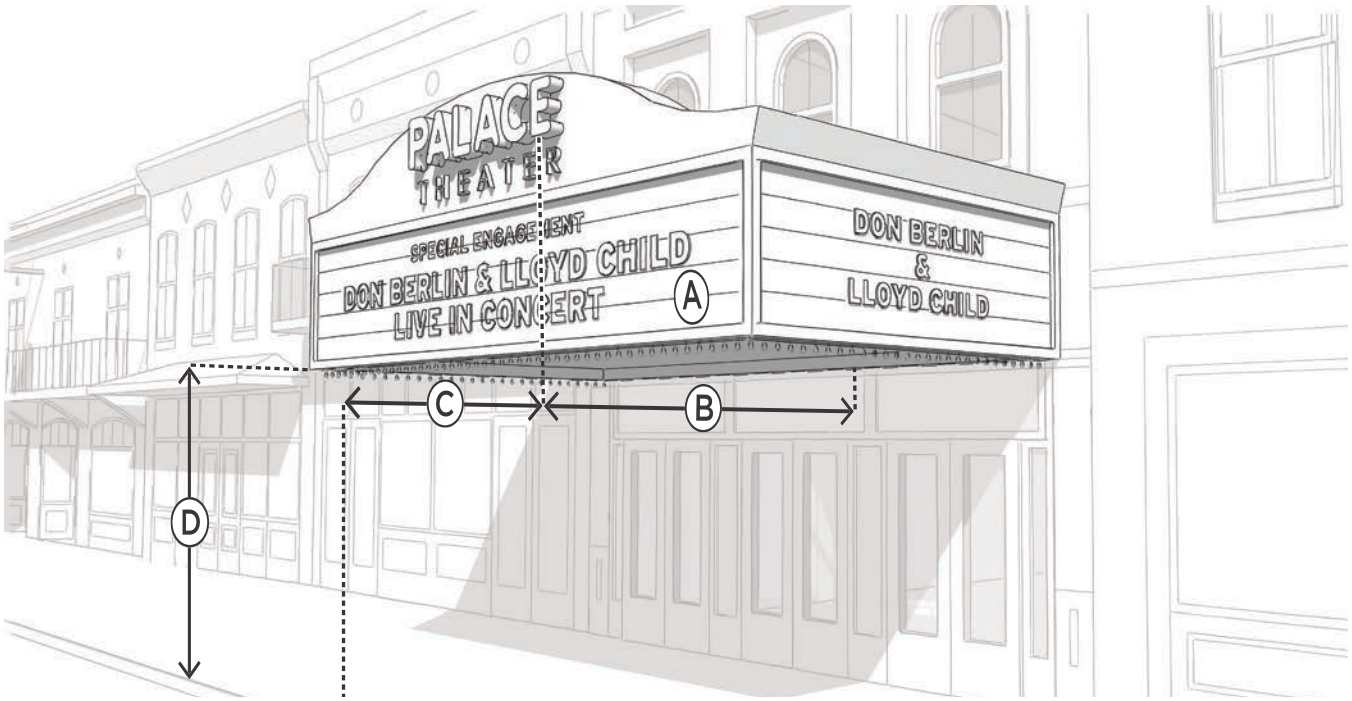

Description

A marquee sign is a sign attached to the top or the face of a permanent roof-like structure constructed over a ground-story main entrance.

Dimensions

A	Area (max)	Refer to Sec. 5.5.2.B
B	Projection from wall, including supports (max)	15’
C	Setback from curb, pole or post sign in right-of-way, or crown of street tree (min)	2’
D	Vertical clearance from sidewalk level (min)	10’

Specific Standards

1. A maximum of one marquee sign is allowed per building.
2. A marquee may be erected over a main entrance only, and may be no wider than the entrance over which it is erected, plus five feet on each side.
3. A marquee sign must be supported solely by the building to which it is attached. No exterior columns or posts are permitted as supports.

5. Sidewalk Sign

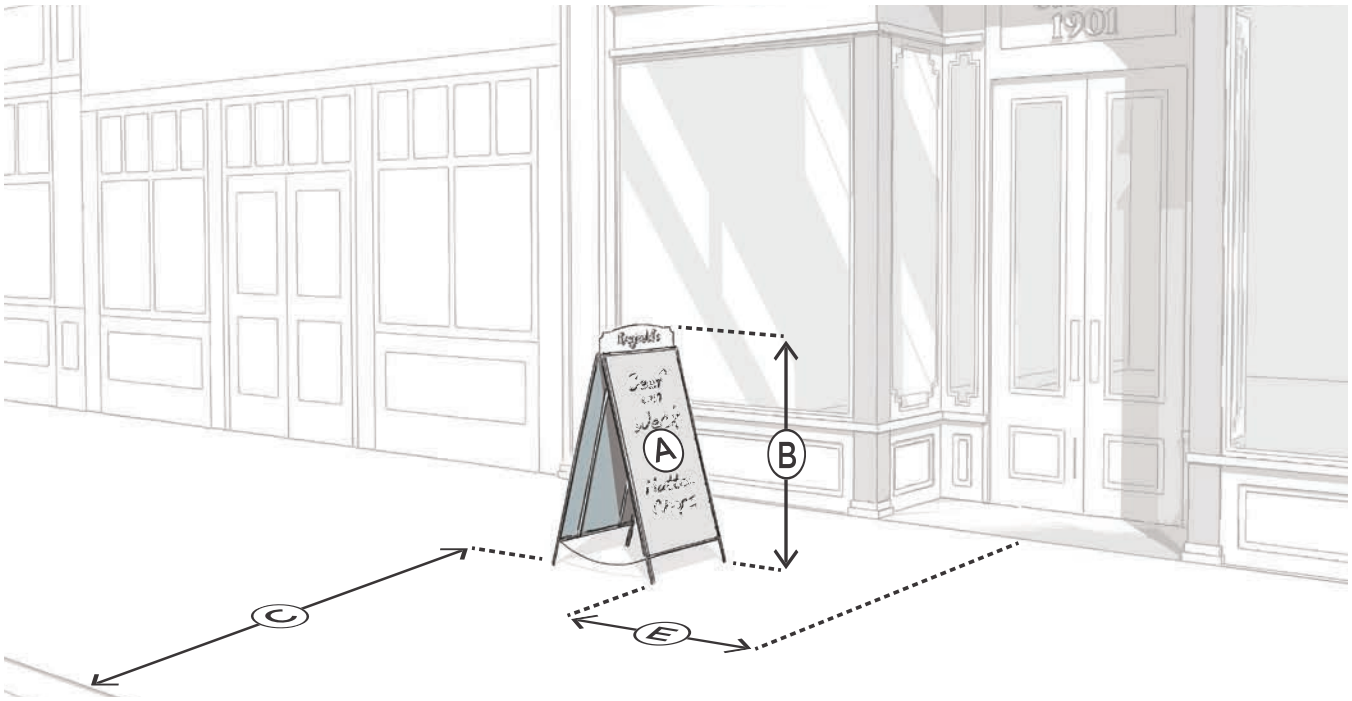

Description

A sidewalk sign is a two-sided, portable sign that is placed outside of an establishment, constructed in the form of an "A" or similar tent-like shape and intended to be viewed from the sidewalk at close range.

Dimensions

A	Area, per side (max)	10 SF
B	Height (min/max)	3' / 4'
C	Setback from curb, pole or post sign in right-of-way, or street tree planting site (min)	2'
D	Distance from main entrance (max)	25'

Specific Standards

1. A maximum of one sidewalk sign is allowed per establishment per right-of-way frontage.
2. A sidewalk sign may be placed outdoors on the premises or a public sidewalk during business hours only, and must be stored indoors at all other times. The sign must not interfere with ingress and egress points, must maintain a minimum of six feet of sidewalk clearance at all times within ten feet of the building face.
3. A sidewalk sign must be vertically oriented, with a height greater than its width.
4. A sidewalk sign may not be illuminated or contain any electronic components.
5. A sidewalk sign may not be placed outdoors when high winds, heavy rain, or heavy snow conditions are present. The Director of Public Works may remove a sidewalk sign during snow removal operations, and is not liable for damage to a sidewalk sign caused by snow removal operations.

6. Skyline Sign

Description

A skyline sign is a sign that is attached flat to or mounted away from, but parallel to, the building facade, and located on the upper band of the building.

Dimensions

A	Area (max)	3 square feet per one foot of linear width of front or corner side facade
B	Width (max)	75% of facade width
C	Height (max)	10’
D	Projection from wall (max)	2’

Specific Standards

1. A maximum of two skyline signs is allowed per building. Only buildings of four stories or greater are eligible to erect a skyline sign.
2. No portion of a skyline sign may extend above the roofline.

7. Wall Sign

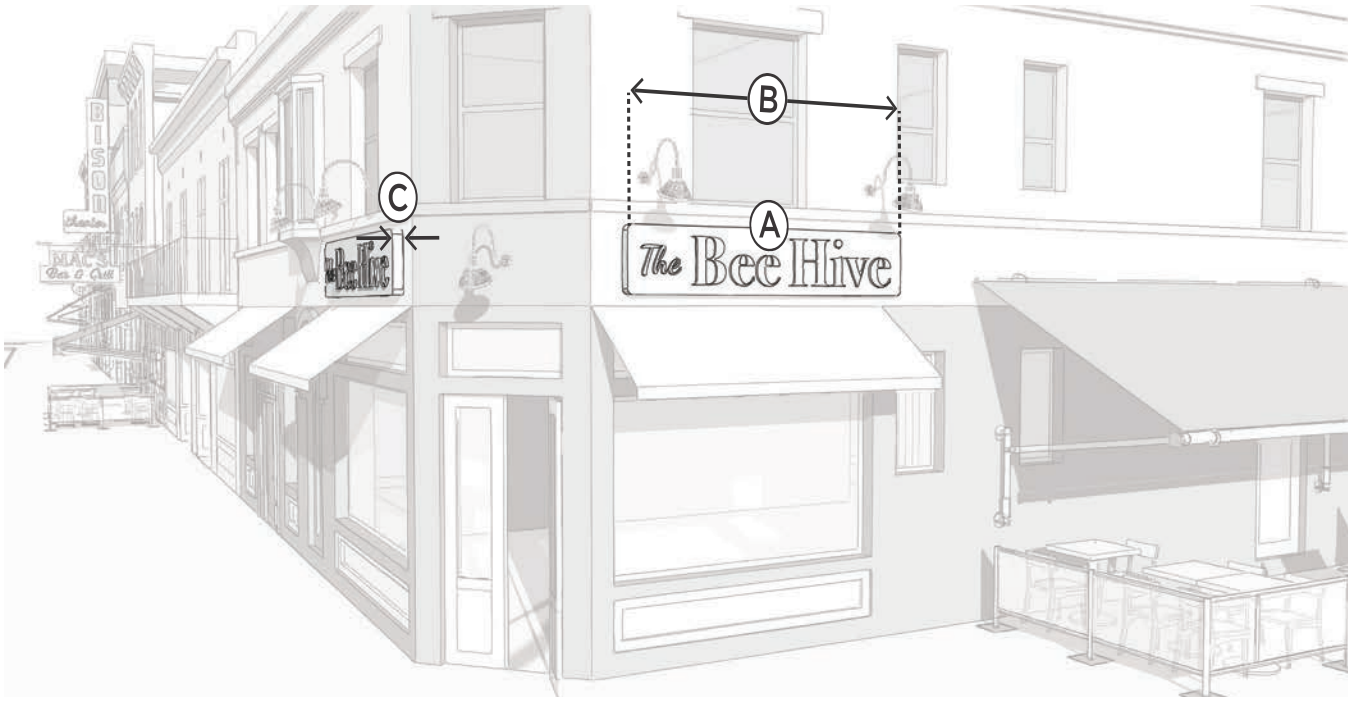

Description

A wall sign is a sign that is attached flat to or mounted away from, but parallel to, any exterior wall of a structure.

Dimensions

A	Area (max)	Refer to Sec. 5.5.2.B
B	Width (max)	90% of facade width
C	Projection from wall (max)	2'

Specific Standards

1. A maximum of one wall sign is allowed per establishment per right-of-way frontage.
2. A wall sign must be located above the ground-story windows and below the window sills of the second story.

5.5.3. Exempt Signs

The below signs do not require a sign permit, except where a building permit is required for installation.

A. **Address Sign.** An address sign is a building-mounted sign that identifies the occupant and/or address of a structure.

1. A maximum of one address sign is allowed per building per right-of-way frontage.
2. An address sign may not exceed two square feet in area for a property with only a residential use or four square feet in area for a property with a non-residential use.

B. **ATM Sign.** An ATM sign is a sign that is incorporated into and designed as part of an automatic teller machine (ATM).

1. The advertisement upon the ATM sign must be limited to the term "ATM" and the name and logo of the financial institution rendering the ATM service.

C. **Building Directory Sign.** A building directory sign is a building-mounted sign listing the names and locations of persons or establishments on the premises, and carrying no other advertising matter.

1. A maximum of one building directory sign is allowed per building per right-of-way frontage.
2. A building directory sign may not exceed 12 square feet in area.

D. **Building Identification Sign.** A building identification sign is a sign consisting of letters applied to the building wall, engraved into the building material, or consisting of a sculptural relief, and which contains the name of a building or describes its function, but which does not advertise any individual tenant of the building or any products or services offered.

E. **Community Bulletin Board.** A community bulletin board is a sign that is erected for the posting of temporary signs and contains no permanent advertising copy.

1. A maximum of one community bulletin board is allowed per building. In the case of a community bulletin board erected in a public right-of-way with the written consent of the Director of Public Works, no more than one such sign may be erected per block face.
2. A bulletin board may not exceed 12 square feet in area.

F. **Government Sign.** A government sign is any sign placed or authorized by a government agency, such as traffic signs and signals, legal notices, railroad crossing signs, or signs regulating the traffic of, or giving information to, motorists, transit riders, cyclists, or pedestrians.

1. Government signs are allowed in any number, configuration, or size.
2. The type and extent of illumination of a government sign is at the discretion of the agency placing or authorizing the sign.

G. **Home Occupation Sign.** A home occupation sign is a sign identifying a home occupation on the premises.

1. A maximum of one home occupation sign, attached to the wall of the dwelling, is allowed per home occupation.
2. A home occupation sign may not exceed two square feet in area.

H. **Memorial Plaque.** A memorial plaque is a plate of metal, ceramic, stone, wood, or other material, bearing text or an image in relief, or both, in memory of one or more persons, an event, a former use of the place, or other historical matter.

I. **Mural Sign.** A mural sign is an on-premise sign that is painted directly on a building, containing a combination of text and graphic elements, and intended to be visible from a greater distance.

1. A maximum of one mural sign is permitted per building.
2. A mural sign is limited only to interior side and rear facades, or to any facade which faces an alley.
3. A mural sign may not exceed 300 square feet in area.

J. **Newspaper Vending Box Sign.** A newspaper vending box sign is a sign that is incorporated into and designed as part of a vending box for a newspaper or other periodical.

1. The advertisement upon the newspaper vending box sign must be limited to the periodical vended.

K. **Parking Directional Sign.** A parking lot directional sign is a sign that includes information assisting in vehicle traffic flow or parking, including information identifying entrances and exits, driveway intersections, drive-through lanes, or loading areas.

1. A parking lot directional sign may not exceed four feet in height and two square feet in area.

L. **Parking Information Sign.** A parking lot information sign is a sign that includes information on the operation of a parking lot, such as "No Parking" or "Unauthorized Users Will Be Towed."

1. A parking lot information sign may not exceed six feet in height and 12 square feet in area.

M. **Place Identification Sign.** A place identification sign is a sign indicating the name of a subdivision, block club, office or industrial campus, educational or medical institution, or other recognized place.

1. A maximum of one place identification sign is allowed per right-of-way intersection.
2. A place identification sign may not exceed 20 square feet in area and four feet in height.

N. **Property Identification Sign.** A property identification sign is a building-mounted sign identifying the property management company or property name of the premises.

1. A maximum of one property identification sign is allowed per building per right-of-way frontage.
2. A property identification sign may not exceed four square feet in area.

O. **Public Information Sign.** A public information sign is a sign that provides information on the use of the facility, such as directional signs, trailhead entry signs, and information kiosks.

1. A public information sign may not exceed 12 square feet in area.

P. **Street Light Banner Sign.** A street light banner sign is a sign that is printed upon flexible material and held taut within frames, attached to a street light.

1. Street light banner signs on City street lights are allowed only with the authorization, and in accordance with the specifications, of the Director of Public Works.

Q. **Temporary Sign.** A temporary sign is any sign not permanently attached to the ground or building, with no sign illumination or utility connections, intended to be displayed for only a short period of time.

R. **Utility Sign.** A utility sign is a sign installed by a public utility in its right-of-way or on its facility, and bearing no commercial message other than such message is necessary to identify the public utility and the use, and warn of any hazards.

S. **Window Sign.** A window sign is a sign that is attached to, placed upon, printed on the interior or exterior of a window or door of a building, or displayed within one foot of the interior of a window, and is clearly intended for public recognition outside the building.

1. The total area of window signs may not exceed 25% of the total area of the window. The total area of the window is measured as the area of continuous glazing until divided by an architectural or structural element, not including mullions.

5.5.4. Sign Measurement

A. **Sign Area.** Sign area is measured as the total area of a sign, as follows:

1. For signs on a background, the entire area of the framework or background of the sign is calculated as sign area, including any material or color forming the sign face or background used to differentiate the sign from the structure against which it is placed.
2. For signs consisting of freestanding letters or logos, the sign area is calculated as the total area of each square, circle, rectangle or triangle, or combination thereof, that encompasses each individual letter or logo. Sign area does not include any supporting framework or bracing, unless such framework or bracing is part of the message or sign face.
3. Window signs printed on a transparent film and affixed to the interior or exterior of a windowpane are calculated as individual letters or logos, provided that the portion of the film around the individual letters or features is fully transparent.
4. The sign area of a three-dimensional, free-form or sculptural (non-planar) sign is calculated as 50% of the sum of the area of the four vertical sides of the smallest cube that will encompass the sign.
5. If a sign has two or more faces, the area of all faces is included in determining the area of the sign, unless the two sign faces are placed back to back and are no more than two feet apart. In such case, the sign area is calculated as the area of one face. If the two faces are unequal in area, the area of the larger face is used to calculate sign area.

B. **Sign Height.** Sign height is measured as the vertical distance from the base of a sign or sign structure, to the highest point of the sign or sign structure.

C. **Vertical Clearance.** For signs attached to a structure, vertical clearance is measured as the vertical distance from the sidewalk level to the lowest point of the sign.

THIS PAGE INTENTIONALLY BLANK

Article 6. Approvals and Administration

Sec. 6.1. Approvals

6.1.1. Special Use Permits

For approval procedures regarding special use permits, refer to Chapter 28, Sec. 9.0, Special uses.

6.1.2. Site Plan Review

For approval procedures regarding site plan review, refer to Chapter 28, Sec. 9.1, Site plan review and approval. In the City Center (CC) and Neighborhood (NC) zoning districts, the Planning Board, in making its determination, must make findings of fact on the following matters:

- The project complies with all applicable standards of this Code.
- The project is consistent with the spirit and intent of the Olean Comprehensive Plan.
- The project contributes to the vitality of public rights-of-way and provides sufficient amenity in relation to the public realm and streetscape.
- The project does not unnecessarily destroy, damage, detrimentally modify, or interfere with the significant design features of historic buildings and structures.
- The project relates to or complements the traditional architecture of Olean and the Southern Tier of New York State.
- The project ensures safe, adequate, and efficient access for all site users, including pedestrians, cyclists, transit passengers, the mobility impaired, and motorists.
- The project is located, designed, and/or managed to meet its anticipated travel demand, and includes reasonable efforts to minimize single-occupancy vehicle trips, reduce vehicle miles travelled, and promote transportation alternatives.
- The project utilizes plant materials that are capable of withstanding the climatic conditions of Olean and the microclimate of the site, and are planted so as to maximize prospects for healthy growth.
- The project is sufficiently served by or provides services, utilities, and infrastructure as required by the City.

6.1.3. Variances

For approval procedures regarding use variances and area variances, refer to Chapter 28, Article 14, Zoning Board of Appeals.

6.1.4. Amendments

For approval procedures regarding text amendments and Zoning Map amendments, refer to Chapter 28, Article 16, Amendments.

Sec. 6.2. Administration

For information on administration and enforcement of this Code, refer to Chapter 28, Article 15, Administration, and Chapter 28, Article 17, Remedies. A schedule of fees for all permits and applications required by this Code will be set by the Mayor and Common Council of the City by resolution.

THIS PAGE INTENTIONALLY BLANK

Article 7. Nonconformities

Nonconforming uses, structures, lots, and signs in the City Center (CC) and Neighborhood Center (NC) zoning districts must comply with the standards of this section. This section supersedes Chapter 28, Article 12, Non-conforming buildings, uses, and lots.

Sec. 7.1. General

7.1.1. Authority to Continue

Any use, structure, lot, or sign that was lawfully established prior to, and has been made nonconforming as of, the effective date or subsequent amendment of this Code, may continue so long as the nonconformity remains otherwise lawful and complies with this section. Any rights conferred upon a nonconformity run with the property and are not affected by changes in tenancy or ownership.

7.1.2. Proof of Nonconformity

The burden of establishing the prior existence of a nonconformity is on the applicant. When applying for any permit or approval related to a nonconformity, the applicant may be required to submit evidence of a prior permit or other documentation showing that the nonconformity existed prior to the date on which it became nonconforming.

7.1.3. Determinations of Nonconformity

If there is question as to whether any legal nonconformity exists, the matter will be decided by the Zoning Board of Appeals.

7.1.4. Illegality

Any use, structure, lot, or sign that was illegal prior to the effective date of this Code remains illegal if it does not conform to the provisions of this Code.

Sec. 7.2. Nonconforming Uses

7.2.1. Description

A nonconforming use is the use of a structure or land that was lawfully established prior to the effective date or subsequent amendment of this Code, but which has been made nonconforming.

7.2.2. Standards

A. **Expansion.** A nonconforming use may not be expanded in area or increased in intensity.

B. **Alteration.** The structure containing the nonconforming use may be altered only if the alterations constitute ordinary repairs or maintenance or are designed to eliminate a nonconformity, provided that the alteration will not create any new nonconformity or increase the area or intensity of a nonconforming use.

C. **Change of Use**

1. A nonconforming use may not be changed to another nonconforming use. When a nonconforming use has been changed, in whole or part, to a conforming use, the part that has come into conformance may not be changed back to a nonconforming use.
2. A change of use is deemed to occur when an existing nonconforming use has been terminated and another use has commenced. Any change of use in violation of this Code is deemed an abandonment of the nonconforming use.

D. **Discontinuance.** Whenever the active and continuous operation of any nonconforming use, in whole or part, has been discontinued for one year, it constitutes an abandonment of the nonconforming use or part of that use, regardless of any intent to resume operation. The discontinued nonconforming use may not be reestablished.

E. **Restoration of Damaged Structures and Uses**

1. When a structure containing a nonconforming use is damaged or destroyed, and the cause of damage was not by any means within the

control of the owner, the nonconforming use may be reestablished provided that no new nonconformities are created and the degree of the previous nonconformity is not increased. If the structure containing the nonconforming use is a nonconforming structure, such structure must be rebuilt, restored, repaired, or reconstructed in accordance with Sec. 7.3, Nonconforming Structures.

2. A building permit must be obtained for such rebuilding, restoration, repair, or reconstruction within one year of the date of damage or destruction. The Zoning Board of Appeals may grant a one-year extension of this period.

3. In the event that a building permit is not obtained within one year of the date of damage or destruction, and no extension is requested, the nonconforming use may not be reestablished unless it conforms to all standards of this Code.

Sec. 7.3. Nonconforming Structures

7.3.1. Description

A nonconforming structure is a structure that was lawfully erected prior to the effective date or subsequent amendment of this Code, but which has been made nonconforming.

7.3.2. Standards

A. **Alteration.** A nonconforming structure may be altered in the following circumstances:

1. The alteration or replacement is required by law or is necessary to restore the structure to a safe condition upon the order of any official charged with protecting public safety.

2. The alteration constitutes routine repair or maintenance, or is designed to eliminate a nonconformity.

3. The alteration conforms to the provisions of this Code, and does not expand an existing nonconformity or create a new nonconformity.

B. **Relocation.** A nonconforming structure may not be moved in whole or part to another location unless the structure conforms to the standards of the zoning district to which the structure is moved.

C. **Restoration of Damaged Structures**

1. When a nonconforming structure is damaged or destroyed to the extent of 50% or more of its replacement value, the structure may be repaired or rebuilt only if it conforms to the provisions of this Code.

2. When a nonconforming structure is damaged or destroyed to the extent of less than 50% of its replacement value, it may be repaired and rebuilt to its previous condition, so long as the cause of damage was not by any means within the control of the owner, no existing nonconformity is expanded, and no new nonconformity is created.

3. A building permit for repairs or reconstruction must be granted within one year of the date of damage or destruction, unless an additional one year extension is granted by the Zoning Board of Appeals.

4. The replacement value of the structure is based on: (a) the sale of that structure within the previous year or, if that is not available; (b) an appraisal within the last two years or, if that is not available; (c) the amount for which the structure was insured prior to the date of the damage or destruction or, if that is not available; (d) an alternative method determined acceptable by the Code Enforcement Officer.

5. In the event that a building permit is not obtained within one year of the date of damage or destruction, and no extension has been applied for, the structure may be repaired or rebuilt only if it conforms to the provisions of this Code.

Sec. 7.4. Nonconforming Lots

7.4.1. Description

A nonconforming lot is an existing lot of record that does not comply with the dimensional standards of this Code, created either prior to the effective date of this Code or, as of the effective date of this Code and any subsequent amendment, has been made nonconforming.

7.4.2. Standards

A. **Alteration.** No nonconforming lot may be subdivided to increase the nonconformity.

B. **Permitted Development.** A lot which is nonconforming due to substandard width or substandard area may be developed for any use which is allowed in the zone, provided that all other zone requirements are met.

Sec. 7.5. Nonconforming Signs

7.5.1. Description

A nonconforming sign is a sign that was lawfully erected prior to the effective date or subsequent amendment of this Code, but which has been made nonconforming.

7.5.2. Standards

A. **Alteration.** A nonconforming sign may remain in use, so long as the sign is not altered to expand an existing nonconformity or to create a new nonconformity. A nonconforming sign may be otherwise be maintained and repaired, and the sign face and sign message may be changed, so long as these alterations do not increase the area, height, or degree of illumination of the sign.

B. **Relocation.** No nonconforming sign may be relocated in whole or part to any other location on the same or any other lot, unless the sign conforms to the standards of this Code.

C. **Restoration of Damaged Signs**

1. When a nonconforming sign is damaged or destroyed to the extent of 50% or more of its replacement value, the sign may be repaired or rebuilt only if it conforms to the provisions of this Code.
2. When a nonconforming sign is damaged or destroyed to the extent of less than 50% of its replacement value, it may be repaired and rebuilt to its previous condition, so long as the nonconformity is not expanded and no new nonconformity is created.

D. **Removal of Abandoned Signs.** Any nonconforming sign that is located on a property that becomes vacant and unoccupied for a period of one year or more is deemed abandoned. Abandoned nonconforming signs must be removed by the owner of the sign or the property owner of the premises. No permits or approvals may be issued for properties with nonconforming abandoned signs until such signs are removed.

THIS PAGE INTENTIONALLY BLANK

Article 8. Definitions

Whenever a defined term appears in the Code, its meaning is as set forth in this section. For definitions of uses, refer to Chapter 28, Sec. 2.1, Definitions. For definitions other than for uses, refer only to this section. Terms not defined in this Code are interpreted in accord with their usual dictionary meaning and customary usage.

Sec. 8.1. Rules of Interpretation

8.1.1. Abbreviations

The following are abbreviations used within this Code:

A. "Max" is an abbreviation for "maximum."

B. "Min" in an abbreviation for "minimum."

C. "N/A" is an abbreviation for "not applicable."

D. "SF" is an abbreviation for "square feet."

E. "TDM" is an abbreviation for "Transportation Demand Management."

F. "VLR" is an abbreviation for "visible light reflectance."

G. "VLT" is an abbreviation for "visible light transmittance."

8.1.2. Conjunctions

A. "And" indicates that all connected words or provisions apply.

B. "Or" indicates that the connected words or provisions may apply singly or in any combination.

C. "Either [...] or" indicates that the connected words or provisions apply singly, but not in combination.

8.1.3. Current Versions and Citations

All references to other regulations or manuals in this Code refer to the most current version and citation for those regulations or manuals, unless expressly indicated otherwise. When the referenced regulations or documents have been repealed and not replaced by other regulations or manuals, Code requirements for compliance are no longer in effect.

8.1.4. Delegation of Authority

Whenever a provision requires the head of a department or another officer or employee of the City to perform an act or duty, that provision will be interpreted as authorizing the department head or officer to delegate that responsibility to others over whom he or she has authority.

8.1.5. Fractions

Any fraction greater than or equal to 0.5 will be rounded up to nearest whole number. Any fraction less than 0.5 will be rounded down to nearest whole number.

8.1.6. Gender

Words denoting one gender apply to all genders.

8.1.7. Lists and Examples

Unless otherwise expressly indicated, lists of items or examples that use "including," "such as," or similar terms are intended to provide examples only, and must not be construed as being limited to the items or examples listed.

8.1.8. Mandatory, Prohibitory, and Permissive Terms

A. Must" and "will" are mandatory terms that express a requirement or impose a duty.

B. "Must not," "will not," "may not," and "no... may" express a prohibition.

C. "Should" expresses a suggestion or recommendation, and does not express a requirement or impose a duty.

D. "May" is permissive.

8.1.9. Number

The singular includes the plural and vice versa.

8.1.10. Tense

The present tense includes the past and future tenses, and the future tense includes the present.

8.1.11. Text and Graphics

Illustrations and diagrams are included in this Code only to illustrate the intent of the text, and are not regulatory. In all cases, the text controls.

Sec. 8.2. Glossary of Terms

For the purposes of this Code, the following terms have the following meanings:

Abandonment. To cease or discontinue a use or activity without intent to resume it.

Accessory Structure. A structure subordinate to a principal structure on the same lot and used for purposes customarily incidental to those of the principal structure.

Accessory Use. A use customarily incidental and subordinate to the principal use or occupancy of a building and located on the same lot with such principal use or building.

Alcove. A recess in a facade, which may enclose a bench, fountain, or sculpture.

Alley. A narrow supplementary thoroughfare for the public use of vehicles affording access to abutting property.

Alteration. As applied to a building or structure, a change or rearrangement in the structural parts of such building or structure, or any enlargement thereof, whether by extension on any side or by any increase in height, or the moving of such building or structure from one location to another.

Approval. Approval by the Code Enforcement Officer of the City of Olean under the regulations of this Code, or approved by an authority designated by this Code.

Bay Window. A window that projects outward from a structure that does not rest on the foundation or on the ground.

Blue Roof. A non-vegetated roof design that is intended to detain rainfall or snowmelt, typically to manage stormwater or store and reuse water.

Building. Any structure which is wholly or partially enclosed within exterior walls, is permanently affixed to the land, has one or more floors and a roof, and is intended for the shelter, housing, or enclosure of persons, animals, or possessions.

Caliper. The diameter of a tree trunk as measured six inches above the root collar, which is at the base of the tree where the tree's roots join the trunk.

Certificate of Compliance. A certificate issued by the Code Enforcement Officer upon completion of construction, alteration, or change in occupancy or use of a building. This certificate acknowledge compliance with all the requirements of this Code and any adjustments thereto granted by the Zoning Board of Appeals.

Chamfered Corner. A building corner which is cut back to a diagonal in order to create a location for the door of a commercial establishment.

Commercial Building. Any building designed for retail, service, or office occupancy.

Console/Corbel. A projection, typically of stone, wood, or metal, jutting out from a wall to support a structure above it. A corbel is a solid piece of material in the wall, whereas a console is a piece applied to the structure.

Cornice. A projection aligned horizontally along and crowning a building wall, door, window, or other opening in the building wall

Diameter at Breast Height (DBH). The diameter of a tree trunk as measured four and one-half feet above ground level, typically used to measure the size of mature trees.

Drive Aisle. A designated travel way within a parking lot or parking structure used to provide vehicular ingress and egress between parking spaces and a driveway.

Driveway. A vehicular lane within a lot, or shared between two or more lots, typically providing access to a garage or other parking area.

Eave. The junction of a building wall and an overhanging roof.

Expression Line. A design element aligned horizontally along a building wall, typically a continuous row or layer of stones, tiles, bricks, shingles, or similar materials. Also called a belt course, string course, or band course.

Exterior Insulation and Finish System (EIFS). A non-load-bearing, exterior wall cladding system that consists of an insulation board attached either adhesively or mechanically, or both, to the substrate;

an integrally reinforced base coat; and a textured protective finish coat.

Facade. The exterior wall of a building.

Facade, Corner Side. The exterior wall of a building that faces the corner side lot line.

Facade, Front. When facing a thoroughfare, the exterior wall of the building that faces the front lot line. When facing a private right-of-way, parking lot, or common area, and not facing a thoroughfare, the exterior wall of the building that contains the main entrance from the private right-of-way, parking lot, or common area. When set within a plaza or other public space, all exterior walls of the building that face the plaza or other public space. When facing North Union Street or South Union Street, the exterior of the wall that faces North Union Street or South Union Street, respectively.

Facade, Interior Side. The exterior wall of a building that faces the interior side lot line.

Facade, Rear. The exterior wall of a building that faces the rear lot line.

Facade Articulation. The elements in the massing of a building that establish character and visual interest.

Facade Rehabilitation. Any facade alteration which involves a change in location or dimension of windows or doors, or the replacement of any facade material. Facade rehabilitation does not include routine repairs or maintenance, or replacement-in-kind of less than 25% of any exisiting facade material in any given year.

Fence. Any artificially constructed barrier of any material or combination of materials erected to enclose or screen areas of land.

Fenestration. The openings in a structure, including windows and doors, but not including loading berths and entries for parking. Fenestration includes frames, mullions, muntins, vents, and other elements integral to a window or door unit.

Fiber Cement. A composite material made of sand, cement, and cellulose fibers.

Glazing. A component of a window or wall made of glass.

Grade. The elevation at which the finished surface of the surrounding lot intersects the walls or supports of a building or other structure. If the line of intersection is not reasonably horizontal, the finished grade in computing height of buildings and other structures or for other purposes will be the average elevation of all finished grade elevations around the periphery of the building.

Green Roof. A vegetated roof design that is explicitly designed to absorb rainfall or snowmelt, typically to manage stormwater, mitigate the heat island effect, provide habitat for urban wildlife, or offer leisure and recreational space for building occupants.

Gross Floor Area. The sum of the gross horizontal areas of all the floors of a building, measured from the exterior faces of exterior walls, or from the centerline of party walls separating two buildings. Gross floor area does not include non-habitable space, within a basement or attic, per the New York State Uniform Fire Prevention and Building Code.

Ground Floor Elevation. Refer to Sec. 2.1, Measurements and Exceptions.

Ground Story. The story of a building closest to the sidewalk level.

Intersection. The area contained within the grid created by extending the curb lines of two or more rights-of-way at the point at which they cross each other.

Landscape. Open areas of the private or public realms, which are composed primarily of living vegetation.

Landscape Buffer. That portion of a site with landscape plantings, fences, and/or other components used to mitigate conflicts between incompatible uses.

Land Use Activity. Any construction or other activity which changes the use or appearance of land or a structure or the intensity of use of land or a structure. "Land use activity" includes, but is not limited to, new structures, expansions to existing structures, new uses, changes in or expansions of existing uses, roads, driveways, and excavations for the purpose of extracting soil or mineral deposits.

Lintel. A structural horizontal block that spans the space or opening between two vertical supports, typically a load-bearing building component, decorative architectural element, or combined ornamented structural item found over portals, doors, and windows.

Loading Area. An area in which goods and products are moved on and off a vehicle, including the berth, apron, and maneuvering area.

Loading Berth. A space within a loading area that is used for the temporary parking of a commercial vehicle for the loading or unloading of goods or materials.

Lot. A designated parcel, tract, or area of land established by a plat or as otherwise permitted by law, to be used or developed.

Lot, Corner. A lot situated at the junction of two

intersecting thoroughfares. This includes a lot that is situated at the terminus of a dead-end thoroughfare or T-intersection.

Lot, Flag. A lot that has access to a public right-of-way by means of a narrow strip of land.

Lot, Interior. A lot other than a corner lot or through lot.

Lot, Through. A lot that abuts two nonintersecting thoroughfares.

Lot Area. Refer to Sec. 2.1, Measurements and Exceptions.

Lot Coverage. Refer to Sec. 2.1, Measurements and Exceptions.

Lot Line. The boundary that legally and geometrically demarcates a lot.

Lot Line, Corner Side. In the case of a corner lot, a lot line that abuts a thoroughfare that is not a front lot line.

Lot Line, Front. In the case of an interior lot, the lot line that abuts a thoroughfare. In the case of a corner lot, the lot line that abuts the principal thoroughfare. In the case of a through lot, both lot lines that abut a thoroughfare. In the case of an interior lot that abuts an alley or passage, but does not abut a thoroughfare, the lot line that abuts the alley or passage.

Lot Line, Interior Side. A lot line that connects a front lot line and rear lot line, and does not abut a thoroughfare.

Lot Line, Rear. A lot line that is opposite the front lot line, and does not abut a thoroughfare. Where the side lot lines meet at a point, the rear lot line is a line that is five feet in width, within the lot and connecting the side lot lines, that is parallel or radial to the front lot line.

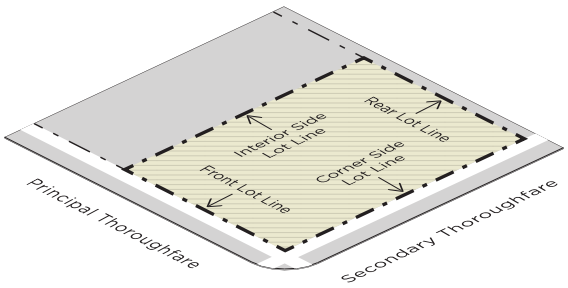

Lot Width. Refer to Sec. 2.1, Measurements and Exceptions.

Luminaire. The complete lighting unit (fixture), consisting of a lamp, or lamps and ballasts, when applicable, together with the parts designed to distribute the light (reflector, lens, diffuser), to position and protect the lamps, and to connect the lamps to the power supply.

Luminaire, Fully Shielded. A luminaire constructed and installed in such a manner that all light emitted by the luminaire, either directly from the lamp or a diffusing element, or indirectly by reflection or refraction from any part of the luminaire, is projected below the horizontal plane through the luminaire's lowest light-emitting part.

Luminaire, Partly Shielded. A luminaire with opaque top and translucent or perforated sides, designed to emit most light downward.

Luminaire, Unshielded. A luminaire capable of emitting light in any direction.

Luminance. The light that is emitted by or reflected from a surface measured by means of a luminance meter. Luminance is typically measured by nits, or luminous intensity (candelas) per unit area (square meters).

Mullion. A vertical element that forms a division between units of a window or door.

Nit. A photometric unit of measurement referring to luminance. One nit is equal to one candela per square meter (cd/m2).

Ornamental Tree. A small tree, typically less than 35 feet in height when mature, that is utilized and valued for the aesthetic appearance, color, and/or texture of its flowers, fruits, foliage, bark, or form.

Parapet. A low wall or protective barrier that extends vertically above the roof surface of a building or other structure.

Parking Row. A group of contiguous parking stalls in a parking lot or parking structure, organized as either a single row or double row.

Parking Space. A location that is designated for motor vehicle parking. A parking space can be in a parking structure, in a parking lot, or on a thoroughfare, and is usually delineated by road surface markings.

Pervious. Being permeable; having the quality of allowing the infiltration of surface water into the soil.

Premises. A lot together with all the buildings and uses thereon.

Principal Building. A building in which is conducted the main or principal use of the lot on which the building is situated.

Principal Use. The main or primary purpose for which a building, other structure, and/or lot is designed, arranged, or intended, or for which it may be used,

occupied, or maintained under this Code.

Right-of-Way. Any land reserved or dedicated as a thoroughfare, alley, pedestrian or bicycle way, railway, waterway, or utility line.

Right-of-Way Line. The line dividing a lot from a right-of-way.

Roof Ridge. The horizontal top area where two sloped roof areas meet.

Setback. The distance between a building facade and an adjacent lot line.

Setback, Required. Refer to Sec. 2.1, Measurements and Exceptions.

Shade Tree. A large deciduous tree, typically greater than 35 feet in height when mature, that is utilized for its broad leaf canopy and ability to cast a shadow upon a large area.

Shrub. A woody deciduous or evergreen plant, smaller than a tree, consisting of several stems from the ground or small branches near the ground.

Sign. Any device visible from a public place whose purpose and design is to convey messages by means of words or images. A sign is not used to describe public art that contains no commercial messages.

Sign Copy. The graphic content or message of a sign.

Sign Face. The surface upon, against, or through which the sign copy is displayed or illustrated, not including structural supports, architectural features of a building or sign structure, non-structural thematic or decorative trim, or any areas that are separated from the background surface upon which the sign copy is displayed by a distinct delineation, such as a reveal or border.

Sign, Off-Premise. A permanent sign erected, maintained, or used for the purpose of the display of messages not related to the use of, products sold on, or the sale or lease of, the property on which it is displayed. Also called a billboard.

Sign, On-Premise. A sign erected, maintained, or used for the purpose of the display of messages relating to the use of, products sold on, or the sale or lease of, the property on which it is displayed.

Site Plan. Maps and supporting information required under Chapter 28, Article 9.

Solar Reflectance Index (SRI). A measure of the ability of a constructed surface to reflect solar heat, as shown by a small temperature rise. The measure utilizes a scale from 0 to 100 and is defined so that a standard black surface is 0 and a standard white surface is 100.

Story. Any habitable level within a building, constructed and designed to support occupancy as defined by the New York State Uniform Fire Prevention and Building Code.

Thoroughfare. An existing public or private way which affords principal means of access to abutting properties and is suitably improved, or a proposed way shown on the Official Map and recorded in the Office of the County Clerk.

Structure. Anything constructed or erected, the use of which requires more or less permanent location on the ground, or attached to something having permanent location on the ground.

Substantial Renovation. Any reconstruction, rehabilitation, or other improvement of a structure, the cost of which will equal or exceed 50% of the structure's assessed value at the time of application for such a project. This term does not include any project for improvement of a structure to correct violations of state or local health, sanitary, or building code specifications which have been identified by a code enforcement official and which are the minimum necessary to correct such violations.

Turret. A small tower that projects vertically and/or horizontally from a structure.

Transom. A window above a door or window that is hinged to a horizontal crosspiece over the door or window.

Transparency. The area of a facade composed of fenestration, typically measured as a percentage.

Transportation Demand Management (TDM). The application of strategies and policies to reduce travel demand, specifically that of single-occupancy vehicles, or to redistribute this demand in space or in time.

Transportation Management Association (TMA). An organized group, often legally constituted with a financial dues structure, applying carefully selected approaches to achieving mobility and air quality goals within a designated area.

Use. This term is employed in referring to:

- The purpose for which any buildings, other structures, or land may be arranged, designed, intended, maintained, or occupied;
- Any occupation, business activity, or operation conducted in a building or other structure, or on land.

Valance. A short drapery, decorative board, or metal strip mounted across the bottom of an awning to conceal structural fixtures.

Visible Light Reflectance (VLR). The percent of total visible light that is reflected by a glazing system. The lower the number, the less visible light reflected.

Visible Light Transmittance (VLT). The percent of total visible light that is transmitted through a glazing system. The lower the number, the less visible light transmitted.

Window Sill. The horizontal member at the base of a window opening, particularly the ledge formed by such a member.

Yard. An unoccupied area that is open and unobstructed from the ground, with the exception of permitted encroachments, on the same lot as a principal building.

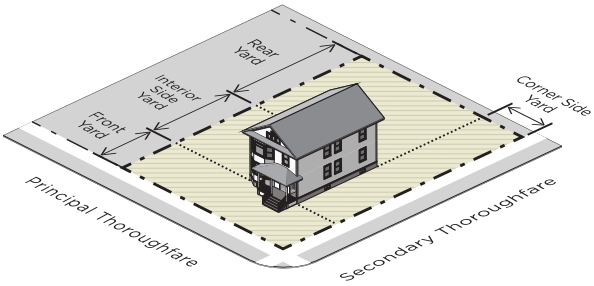

Yard Line. A line drawn parallel or radial to the lot line at a distance equal to the depth of the building facade which is oriented to that lot line.

Yard, Corner Side. The area of the lot that extends from the front yard line to the rear lot line, between the corner side lot line and the corner side yard line.

Yard, Front. The area of the lot that extends between interior side lot lines or between the corner side lot line and the interior side lot line, between the front lot line and the front yard line.

Yard, Interior Side. The area of the lot that extends from the front yard line to the rear yard line, between the interior side lot line and the interior side yard line.

Yard, Rear. The area of the lot that extends between interior side lot lines or between the corner side yard line and the interior side lot line, between the rear lot line and the rear yard line.

Zoning District. A geographical area within which this Code governs building form and land use. Zoning districts are designated on the Zoning Map.

CHUCK BANAS DESIGN